INC

VBA23001-R.3762.A

作成承認印	配布許可印
ニコン映像カンパニー品質保証部 GM	サービス計画課 M

Nikon

D90

VBA23001

REPAIR MANUAL

Nikon | NIKON CORPORATION
Tokyo, Japan

Printed in Japan SEP 2008

Contents

Points to notice for Disassembly and Assembly ..... D 1

Disassembly

1. External area

Bottom cover ..... D 2
Removal of Back cover ..... D 3

2. Back cover

Rear display FPC unit ..... D 4
TFT monitor ..... D 8
Button / SW-related ..... D 9
SD cover unit ..... D 10
Speaker unit ..... D 12
DG-shield plate ..... D 12
DG PCB unit ..... D 13
Image sensor unit ..... D 14
A/M cover plat ..... D 15
SB pop-up ..... D 15
Front cover unit ..... D 16
Grip rubber unit ..... D 17
I/F cover ..... D 18
Removal of top cover ..... D 20

3. Top cover

AF-assist lamp unit ..... D 23
Top cover FPC unit ..... D 23
AE-L button ..... D 28
Top cover grip button ..... D 28
Power dial ..... D 29
Hot shoe ..... D 30
SB upper cover ..... D 30
SB lower control unit ..... D 31
Remote control unit ..... D 34
M/D FPC unit ..... D 34
Delete button ..... D 35
Mode dial ..... D 35
Microphone ..... D 35
Removal of the main condenser ..... D 37
Main PCB unit ..... D 38

4. Separation of Front body from Rear body

Eyepiece mold . . . . . D 40

5. Rear body

SB/IF PCB . . . . . D 42
DC/DC PCB . . . . . D 42
Imaging power PCB unit . . . . . D 44
Bottom plate unit . . . . . D 45
Power drive PCB unit . . . . . D 46
Battery contact-spring . . . . . D 48
Eyelet . . . . . D 50
Buzzer unit . . . . . D 51
Drip-proof sponge . . . . . D 51
Dust-proof tape . . . . . D 52

6. Separation of Prism box unit from Front body unit . . . . . D 53

7. Prism box unit

Metering FPC unit . . . . . D 54
Inside finder LCD unit . . . . . D 54
Screen box . . . . . D 55
Penta prism . . . . . D 57
Penta prism FPC unit . . . . . D 59
Eyepiece barrel unit . . . . . D 60

8. Front body unit

SB PCB . . . . . D 61
Shutter unit . . . . . D 62
AF CCD unit . . . . . D 62
Front body FPC . . . . . D 64
Aperture control unit . . . . . D 66
AF driving base . . . . . D 69
Bayonet . . . . . D 70
A/M change sw . . . . . D 72
Release button . . . . . D 73
F-min SW . . . . . D 74
Preview sw . . . . . D 74
Main mirror unit . . . . . D 75

Assembly / Adjustment

1. Front body unit

Main mirror unit . . . . . A 3
Preview SW . . . . . A 4
F-min SW . . . . . A 5
Release button . . . . . A 5
A/M change SW . . . . . A 7
Bayonet . . . . . A 8
AF driving base . . . . . A 10
Aperture control PCB . . . . . A 11
Front body FPC . . . . . A 14
AF CCD unit . . . . . A 17
Shutter unit . . . . . A 18
SB PCB . . . . . A 20
Height adjustment of AF coupling shaft . . . . . A 21
Height adjustment of Aperture lever . . . . . A 21
Angle inspection and adjustment of Main mirror and Sub-mirror . . . . . A 22
Angle adjustment of Main mirror and sub-mirror . . . . . A 23

2. Prism box

Eyepiece barrel unit . . . . . A 24
Penta prism FPC unit . . . . . A 25
Penta prism . . . . . A 25
Screen box . . . . . A 28
Inside finder LCD unit . . . . . A 30
Metering FPC unit 1 . . . . . A 30

3. Rear body

Dust-proof tape . . . . . A 32
Drip-proof sponge . . . . . A 32
Buzzer unit . . . . . A 33
Eyelet . . . . . A 34
Battery contact spring . . . . . A 36
Power drive PCB unit . . . . . A 37
Bottom plate unit . . . . . A 38
Imaging power PCB unit . . . . . A 39
DC/DC PCB . . . . . A 40
SB/IF PCB unit . . . . . A 43

4 .Mounting Front body on Rear body.

Eyepiece mold . . . . . A 44
Inspection and Adjustment of Body back . . . . . A 45
Main PCB . . . . . A 48
Mount the main condenser . . . . . A 50

5. Top cover

Microphone. . . . . A 52
Mode dial . . . . . A 52
Delete button . . . . . A 53
M/D FPC unit . . . . . A 53
Remote control unit . . . . . A 54
SB lower control unit . . . . . A 55
SB upper cover . . . . . A 57
Hot shoe . . . . . A 58
Power dial. . . . . A 59
Top cover grip button . . . . . A 60
AE-L button . . . . . A 60
Top cover FPC unit . . . . . A 61
AF assist lamp unit . . . . . A 65
Mount the top cover on the body . . . . . A 66
I/F cover . . . . . A 69
Grip rubber unit . . . . . A 70
Front cover unit . . . . . A 71
A/M cover plate . . . . . A 72
Image sensor unit . . . . . A 73
DG PCB unit. . . . . A 74
Inspection and adjustment of AE CCD positioning . . . . . A 75
Battery check voltage inspection . . . . . A 77
DG shield plate . . . . . A 78
Speaker unit . . . . . A 78
Accuracy inspection and adjustment (Camera body exc. Imaging) . . . . . A 79
D90 Inspection and Adjustment Software (J65119). . . . . A 80
Procedure for installing USB driver . . . . . A 84
Necessary adjustments when parts are replaced（Camera） . . . . . A 86
AE inspection and adjustment . . . . . A 87
AF inspection and adjustment . . . . . A 89

サービス
計画課
M

6.Back cover

SD cover unit . . . . . A 92

Button / SW . . . . . A 93

TFT monitor. . . . . A 94

Rear display FPC unit . . . . . A 95

Mounting of Back cover . . . . . A 100

7. External area

Bottom cover . . . . . A 101

Shooting-image Adjustment . . . . . A 102

Shooting image adjustment software and Software updates. . . . . A 103

Image adjustment . . . . . A 104

∞ Infinity focus inspection & adjustment. . . . . A 109

Measurement of Consumption current value . . . . . A 110

Cleaning between Penta prism and SI-LCD . . . . . A 111

Wiring . . . . . E 1

Mounting Drawing . . . . . E 2 ～E 16

Inspection Standards . . . . . R 1 ～R 6

Tools . . . . . T 1 ～T 4

Points to notice for Disassembly and Assembly

⚠ WARNING

- There are high voltege parts inside. Be careful of this electric shock, when you remove the cover.
- You must discharge the main condenser according to the instruction of this repair manual after you remove the cover.

Caution:

① In disassembly/(re)assembly, be sure to use conductive mat (J5033) and wrist strap (J5033-5), in order to protect electric parts from static electricity.

② Before disassembling, be sure to remove batteries or AC power cord.

③ In disassembling, be sure to memorize the processing state of wires and FPC, screws to be fixed and their types, etc.

④ The low-pass filter of the image PCB/base plate is easily damaged. Handle it very carefully.

Points to notice for Lead-free solder products

- Lead-free solder is used for this product.
- For soldering work, the special solder and soldering iron are required.
- Do NOT mix up lead-free solder with traditional solder.

Caution:
When "Separation of Front body from Rear body", "Disassembly of Image sensor unit" and "Disassembly of Bayonet" are performed, be sure to carry out "RESET AF-DEFOCUS COMPENSATION" of the D90 adjustment software after assembly.

Disassembly

1. External area

Bottom cover

- Tilt the battery cover unit (#B151) at approx. a 35-degree angle, and pull it out.
- Take out the two screws (#657), the two screws (#658), the screw (#661), and the two screws (#692).
- Remove the bottom cover unit (#25).

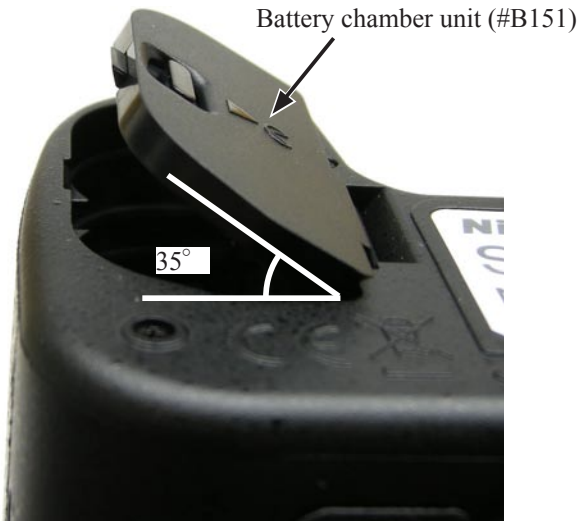

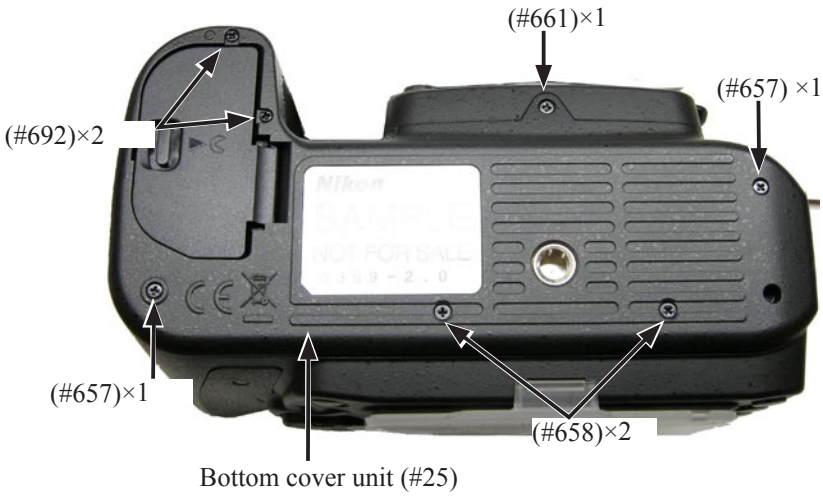

Removal of Back cover

- Take out the two screws (#608).
- Take out the four screws (#657).

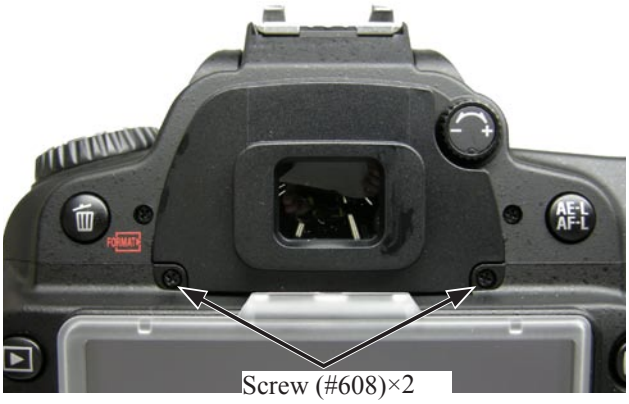

- Slacken the grip side of the cover first, and then remove the cover wholly.
- Disconnect the FPC of the back cover from the connector on the DG PCB unit.

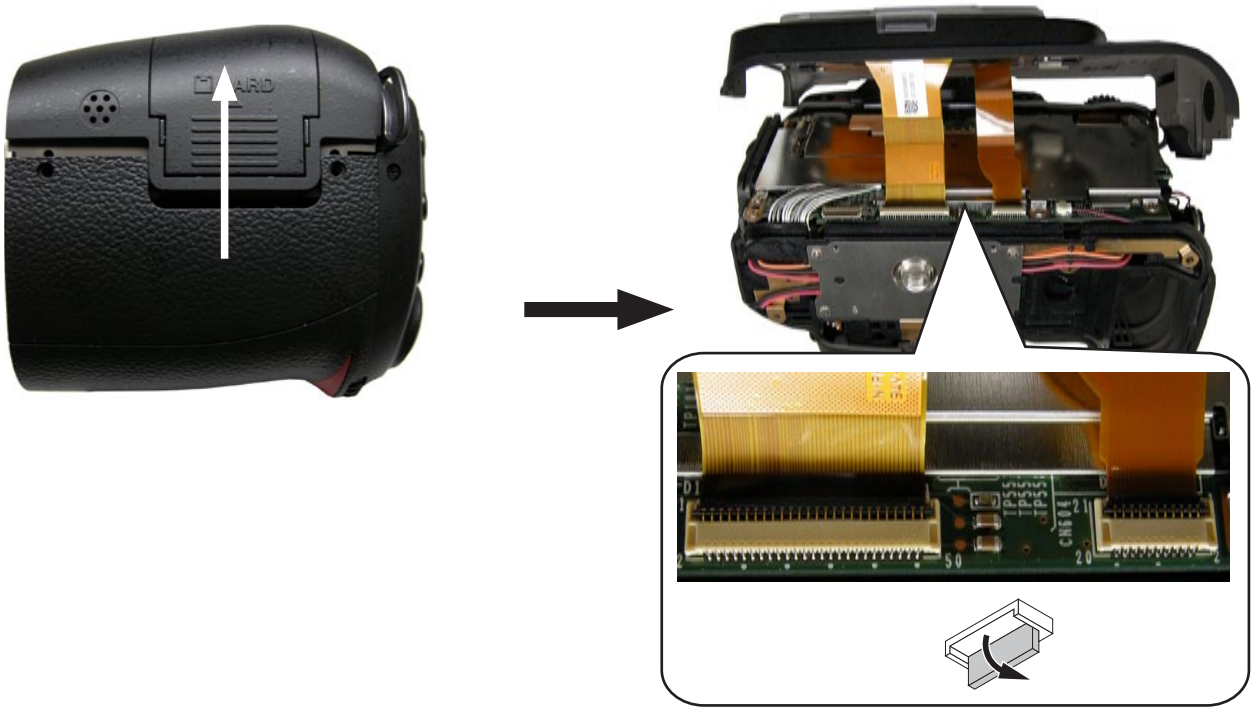

2. Back cover

・Peel off the cover rubber (#407) and the double-stick tape (#409).

・Remove the SD access lamp window (#408).

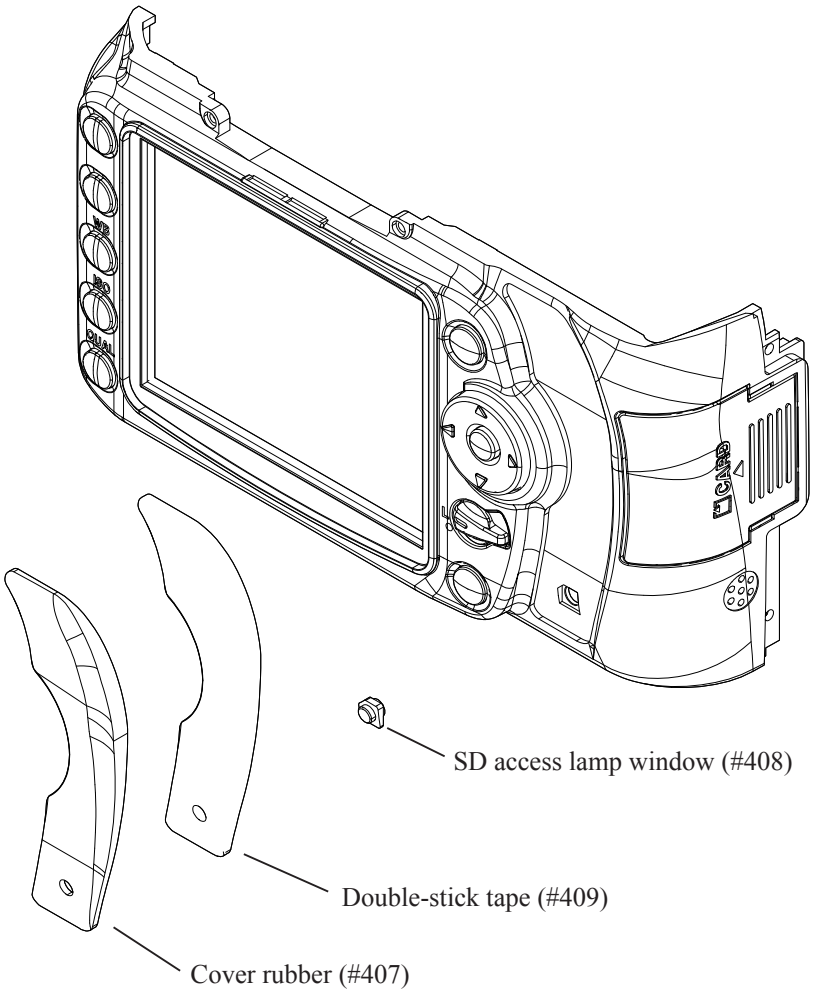

Rear display FPC unit

・Remove the gasket (#483).

・Peel off the tape [TA-0005 (12.5×12.5)].

・Take out the ten screws (#670).

・Disconnect the connector.

・Take out the three screws (#710).

・Remove the plate (#422).

・Remove the rear display FPC unit (#B1034) together with the plate (#415).

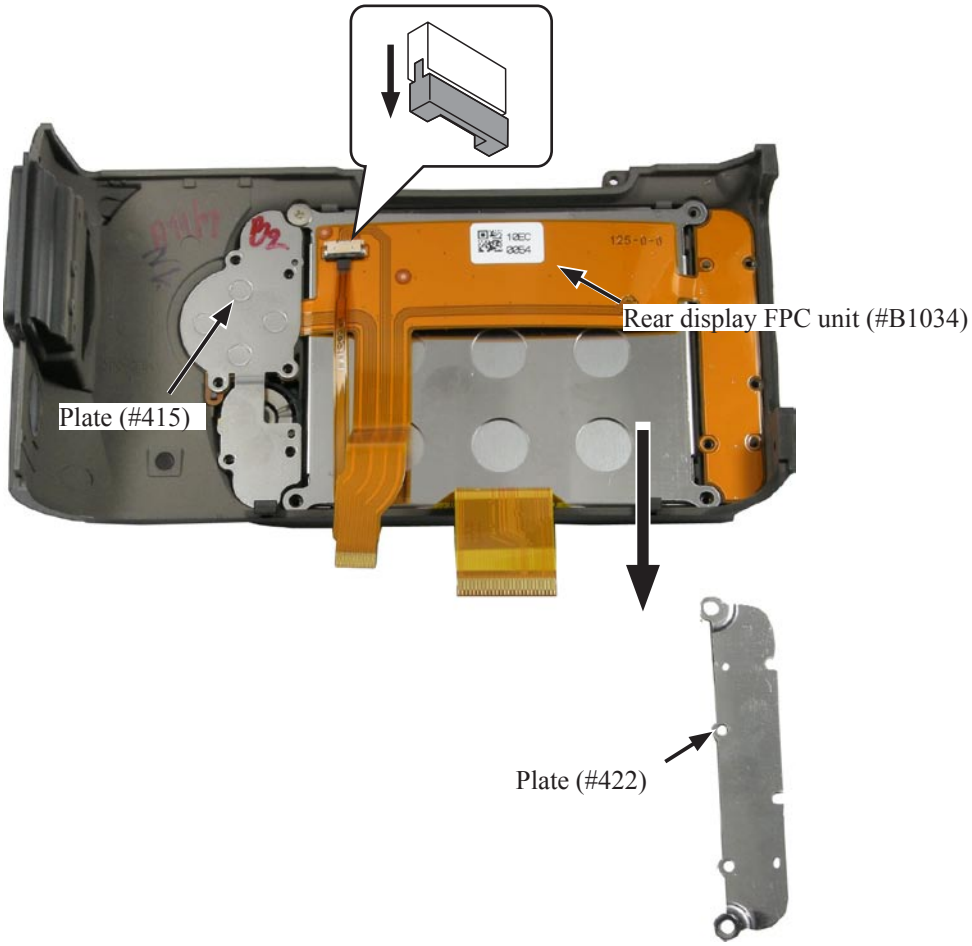

・Peel off the rear display FPC unit (#B1034) from the plate (#415).

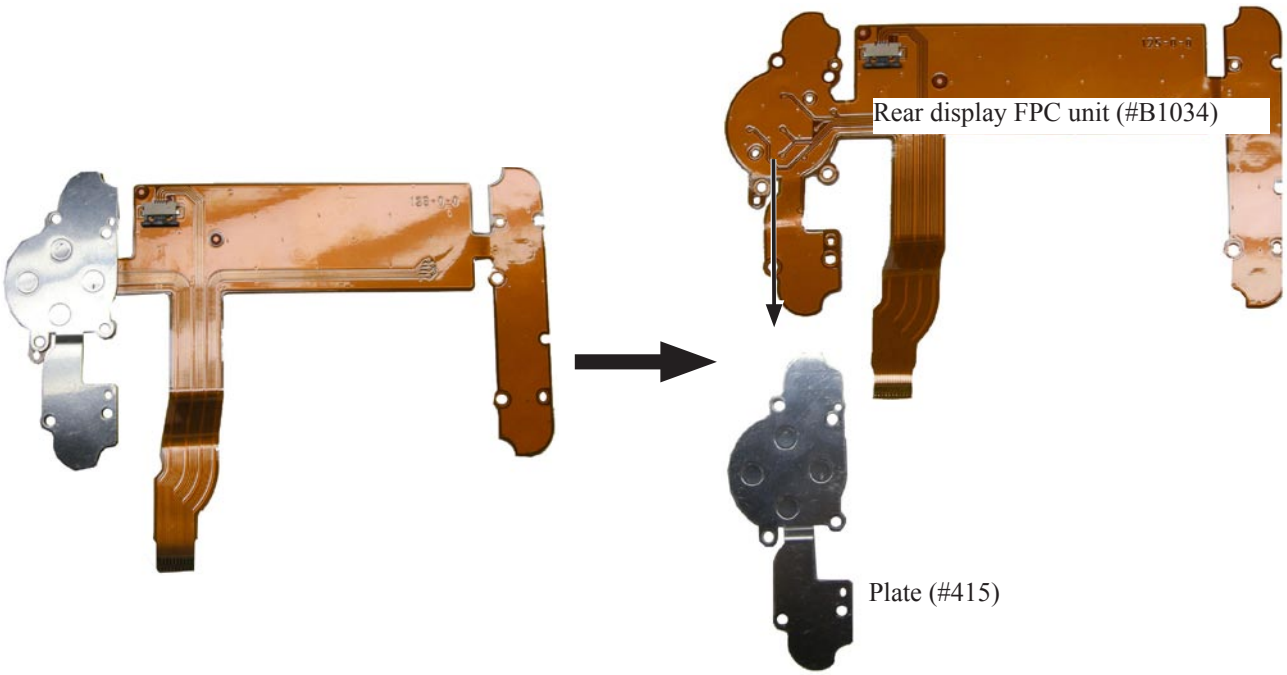

・Peel off the double-stick tape (#423) from the plate (#415).

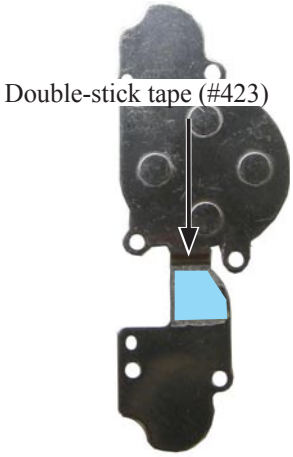

TFT monitor

- Take out the screw (#710).
- Remove the plate (#406).
- Remove the TFT monitor (#1057).

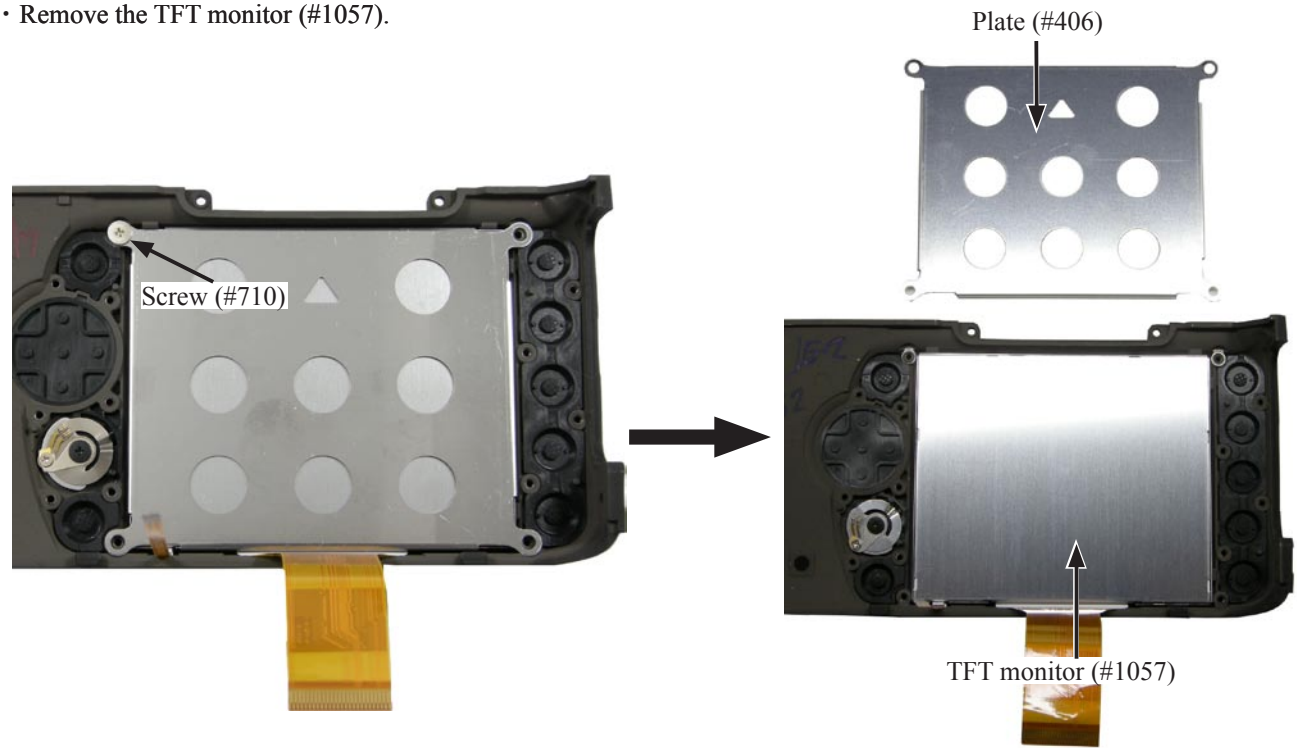

Button / SW-related

・Remove the buttons (#421, #429, and #430).

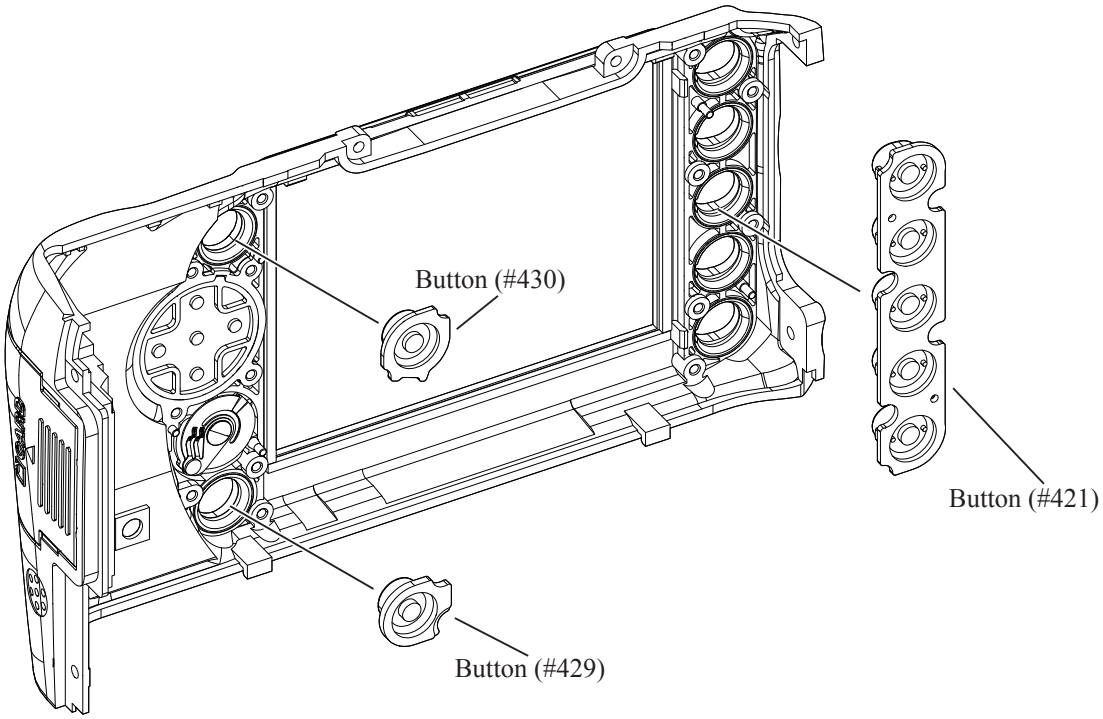

・Remove the conducting rubber (#413).

・Remove the button (#414).

・Remove the multi-selector (#412).

・Take out the ~~screw (#707)~~ Screw (ROHS) (#707) △ (Revision).

・Remove the selector SW unit (#B420).

・Remove the selector lock lever (#416).

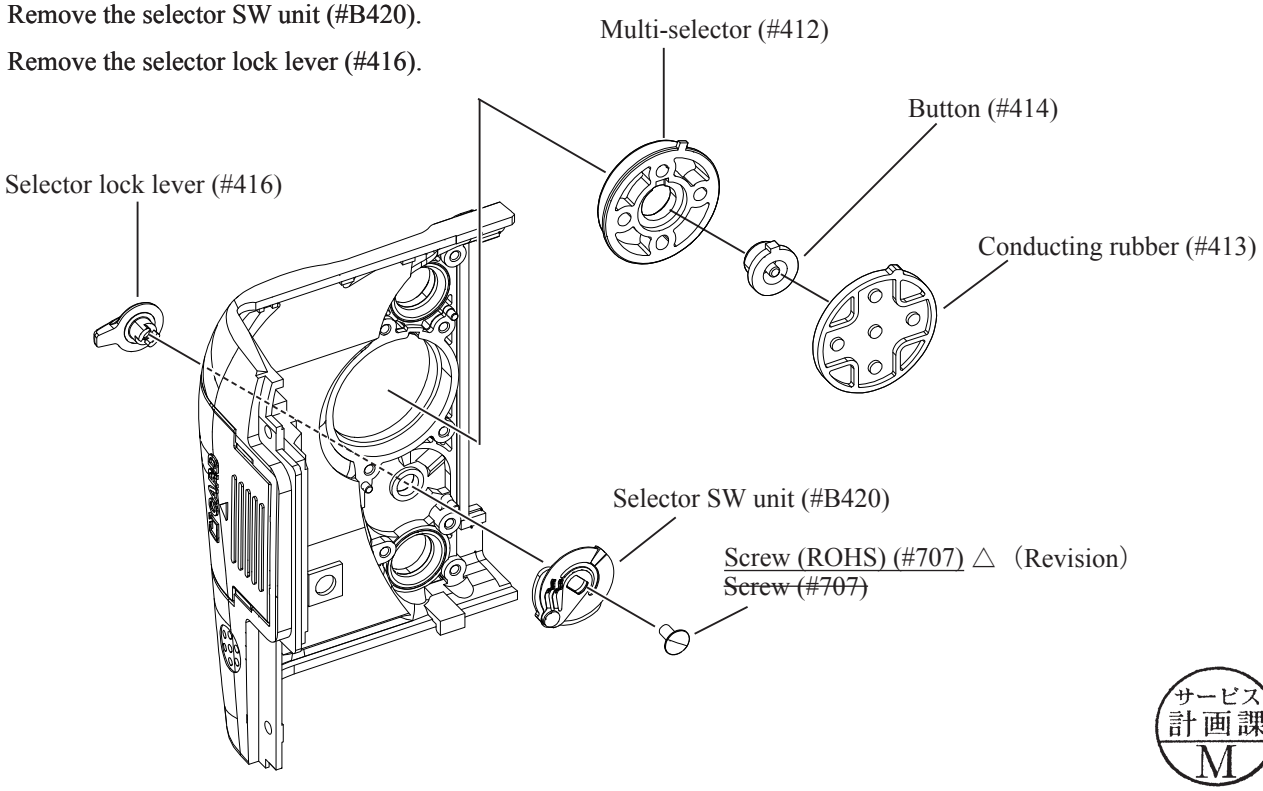

サービス計画課 M

SD cover unit

・Take out the two screws (#621), and remove the SD cover unit (#B431).

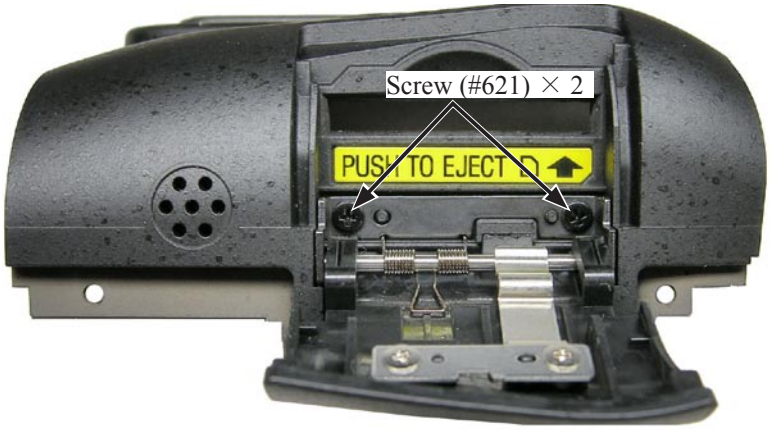

・Peel off the label (#436).

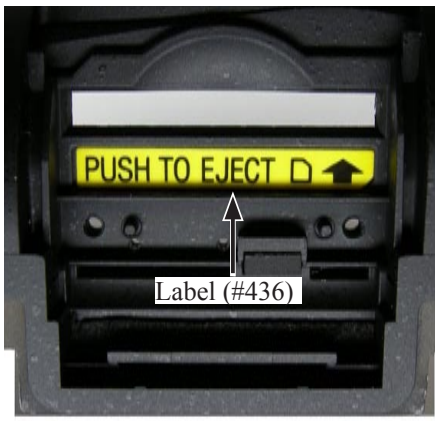

・Peel off the rubber (#433).
・Peel of the drip-proof sheet (#44).

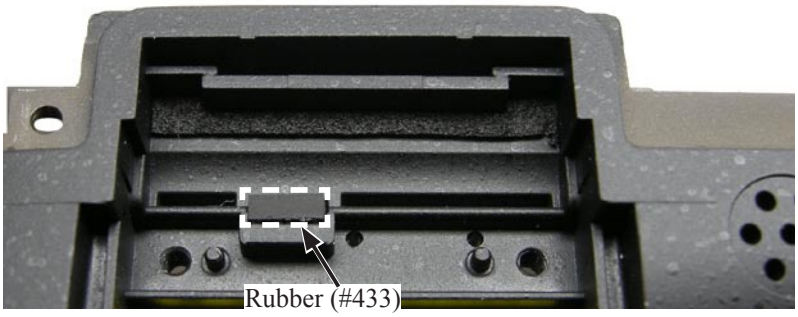

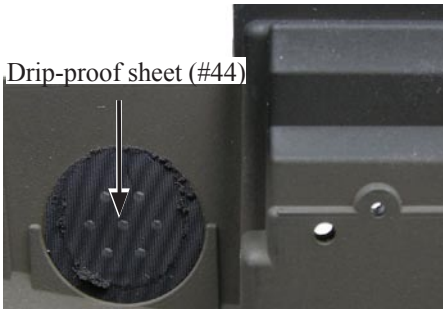

・Peel off the two sponges each (#404 and #405).

・Remove the TFT monitor cover (#402).
・Peel off the double-stick tape (#403).

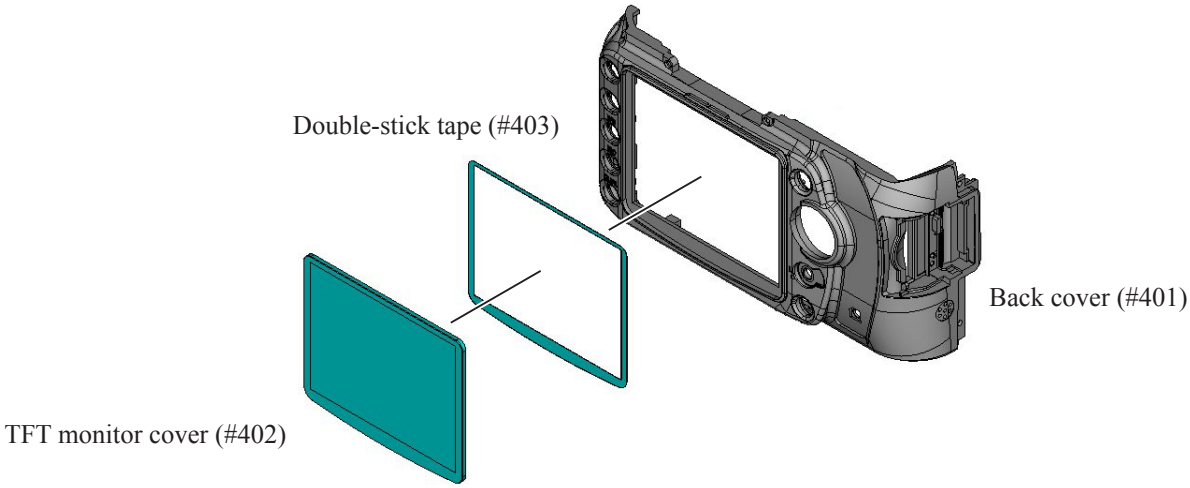

Speaker unit

- Disconnect the connector.
- Take out the two screws (#612), and remove the speaker unit (#B45).

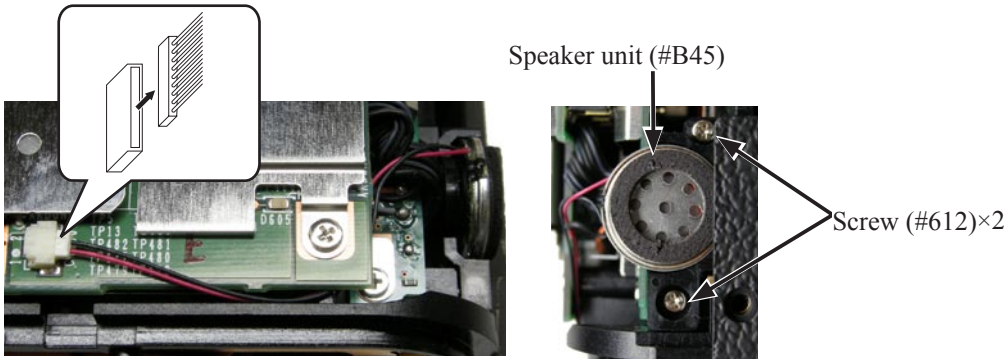

DG-shield plate

- Disconnect the image sensor unit-FPC.
- Take out the six screw (#683).
- Remove the shield plate (#78) and shield plate unit (#B79) carefully not to damage the clip.

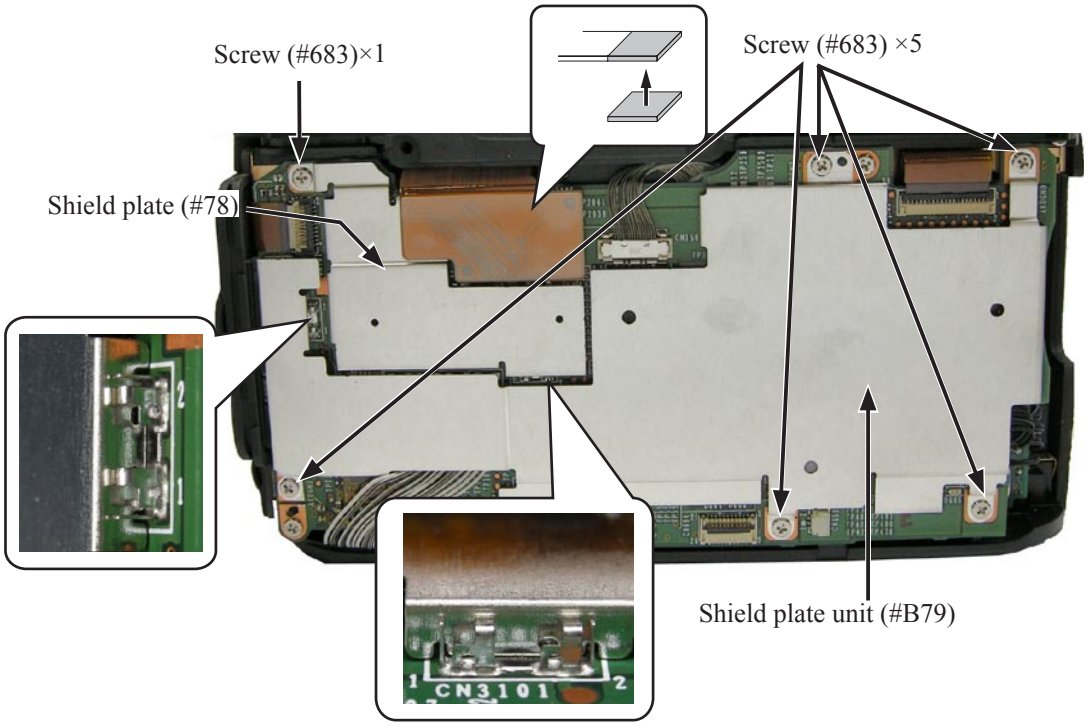

DG PCB unit

・Disconnect the three FPCs and two harnesses.

・Take out the two screws (#683).

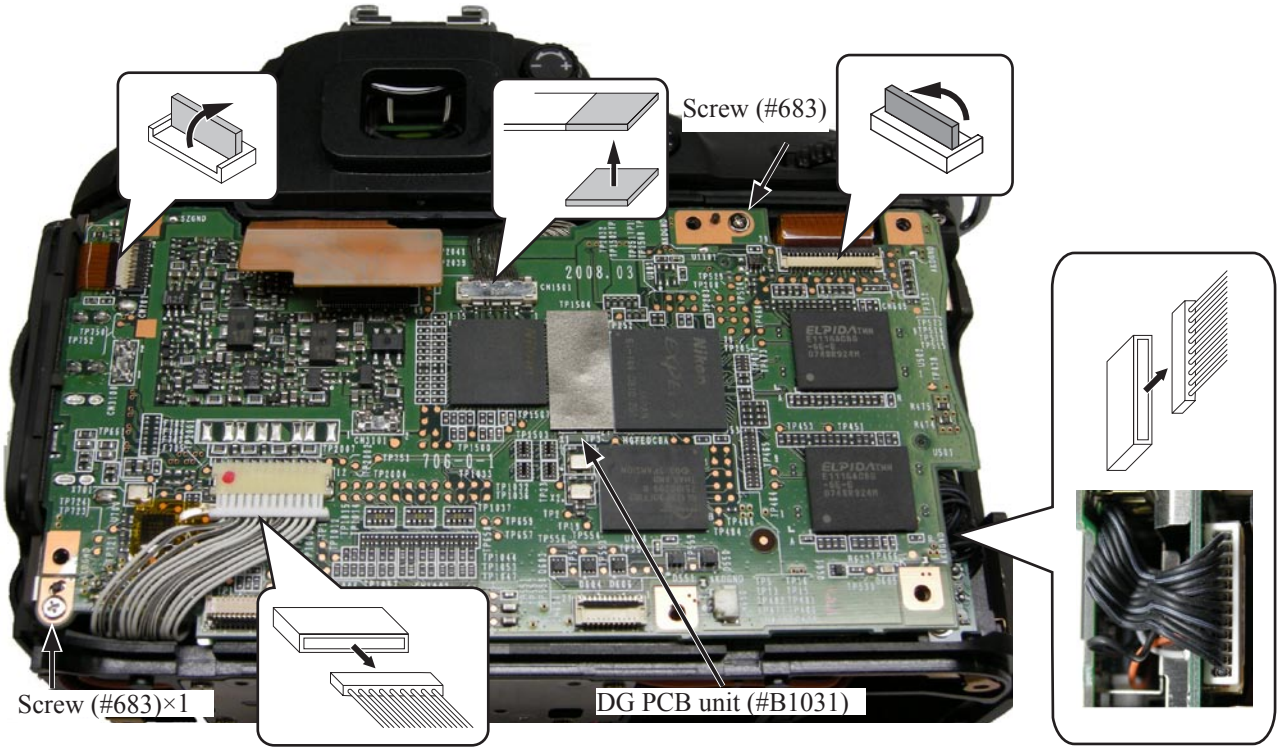

・Remove the DG-PCB unit (#B1031).

・Disconnect the wire of the microphone.

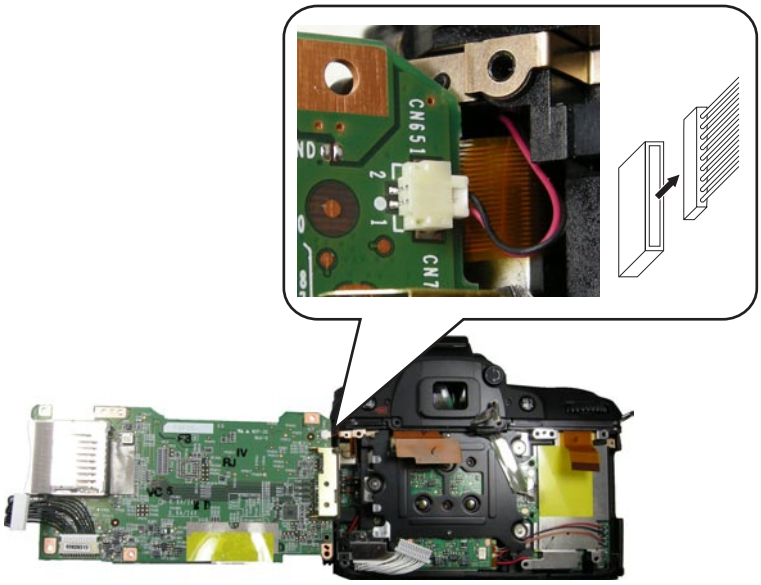

Image sensor unit

・Unsolder the wires (Red/Black/Orange/Gray).

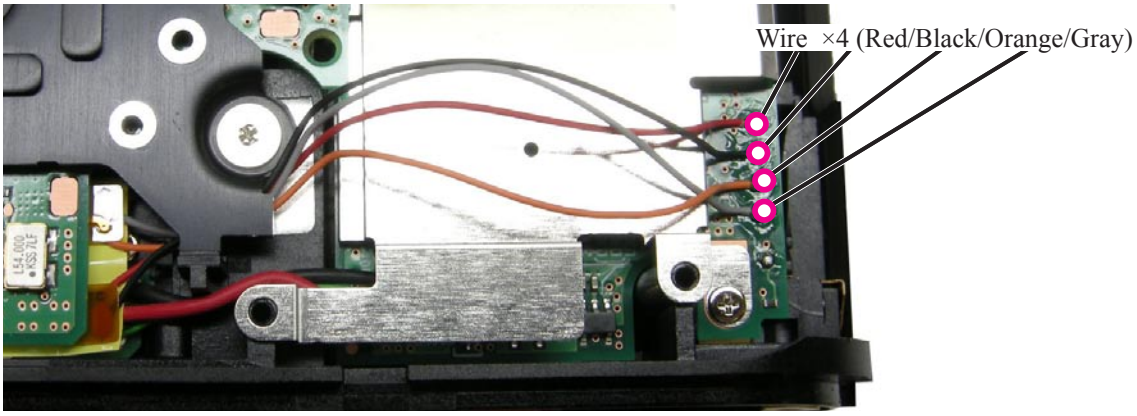

・Take out the three screws (#680), and remove the image sensor unit (#B1051).

Caution: Some bodies have already the lumirror sheet T=0.1(#62) and washer (#63) attached. (ref. page A46)

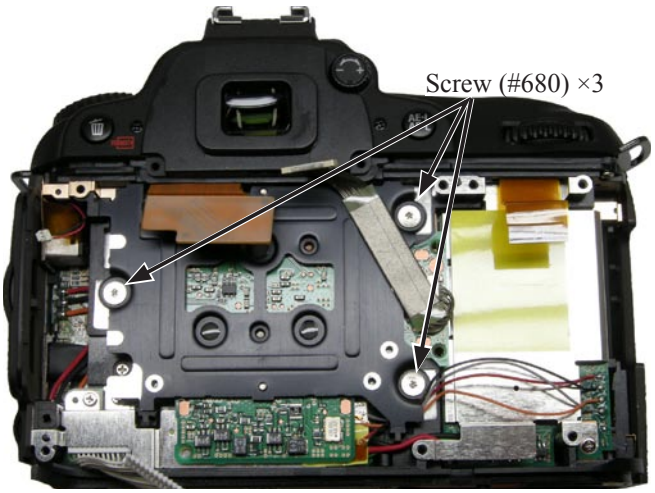

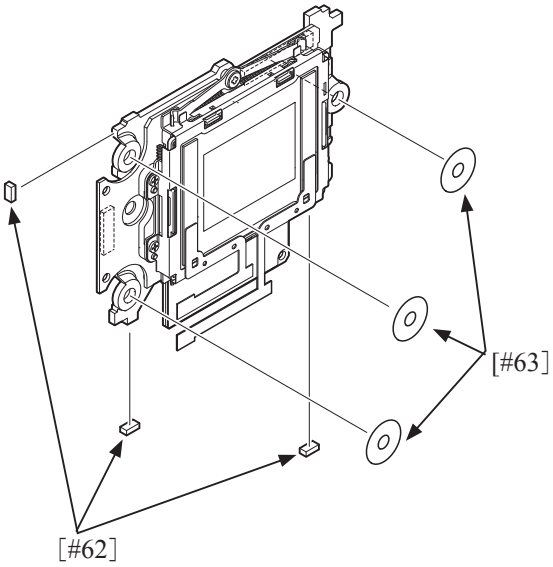

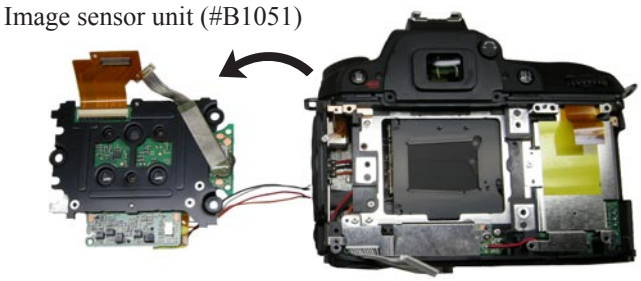

~~A/M cover plat~~ A/M cover plate △ (Revision)

・Remove the A/M cover plate (black) (#124) (carefully NOT to damage it).
・Take out the screw (#659), and remove the A/M select lever (#121).

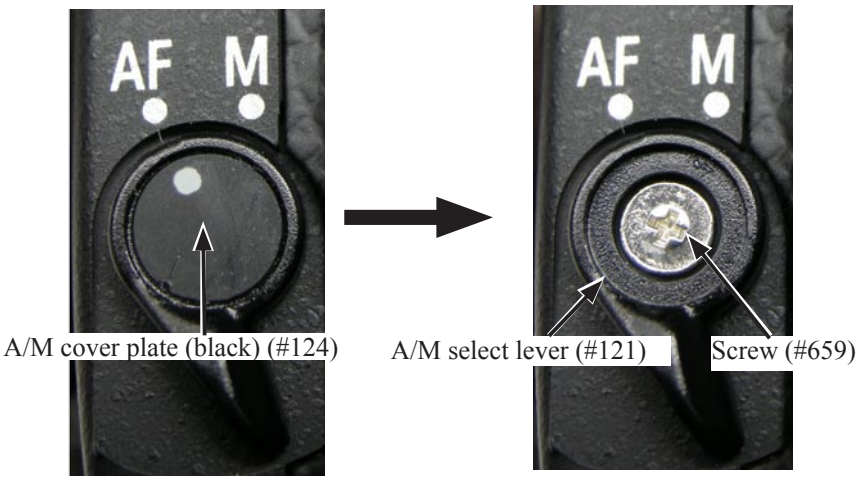

SB pop-up

・ Cut the lumirror sheet, etc, into a below-size piece. Then, insert it into the gap of the top cover pop-up section as below, and slide it in the direction of the arrow to raise the speedlight.

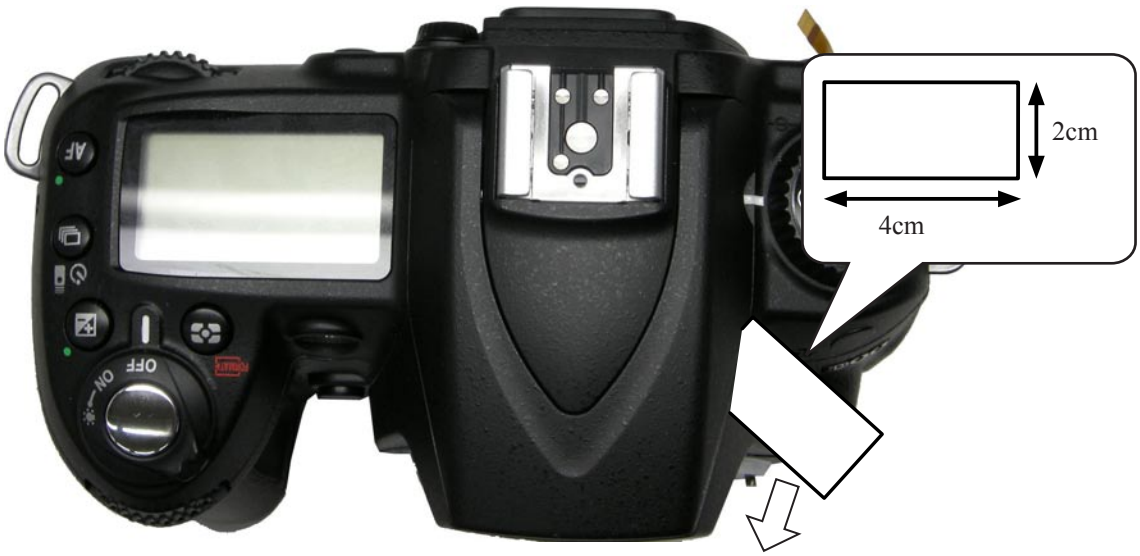

サービス計画課 M

Front cover unit

- Take out the two screws (#611).
- Take out the two screws (#613).
- Remove the front cover unit (#B24).

- Remove the E-ring (#722).
- Remove the spring (#201) and the button (#229).
- Remove the snap ring (#387) from behind.
- Remove the buttons (#391 and #392) from the front cover unit .

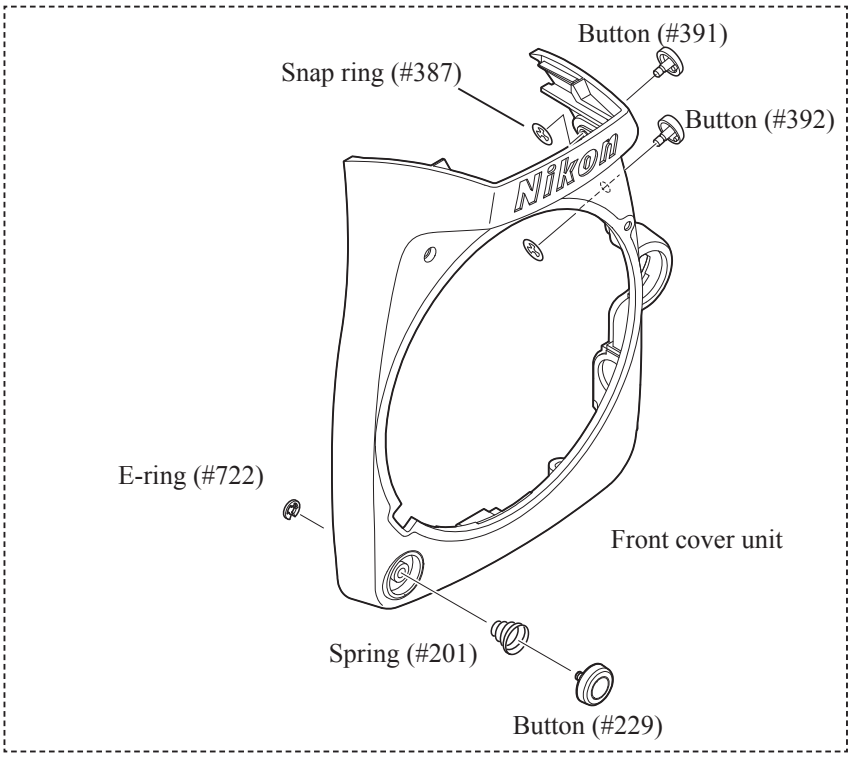

Front cover unit (#B24)

Grip rubber unit

- Take out the screws (#627 and #618).
- Remove the grip rubber unit (#B26).

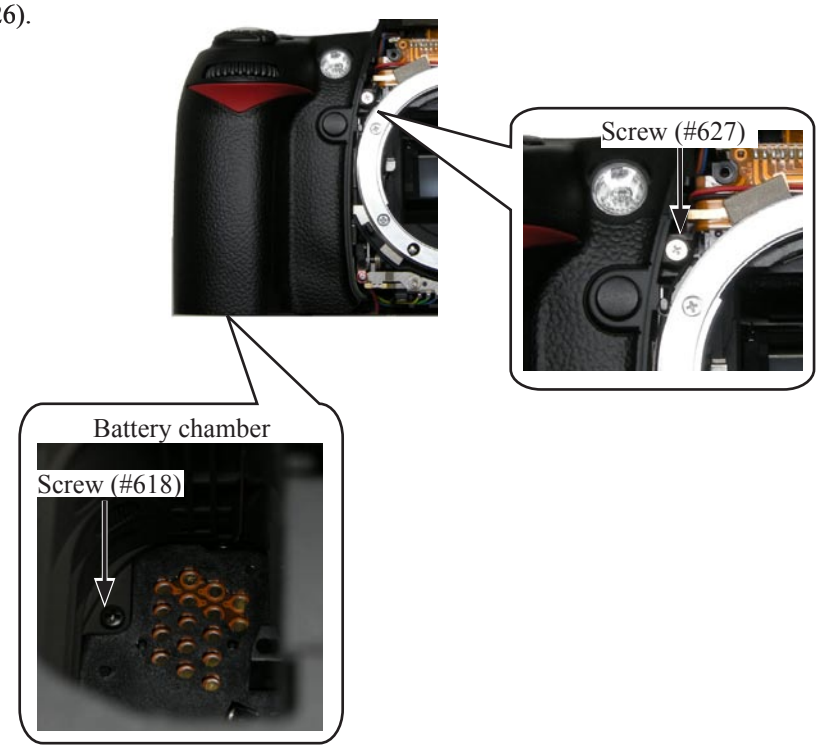

- Peel off the tape [TA0005 (3.3×11)].
- Peel off the tape (#811).
- Remove the plate (#388).
- Remove the button (#390) and the conducting rubber (#389).
- Attach the spring (#161) from behind, and take out the screw (#638).
- Remove the grip red mold (#29) from the front side of the grip cover.

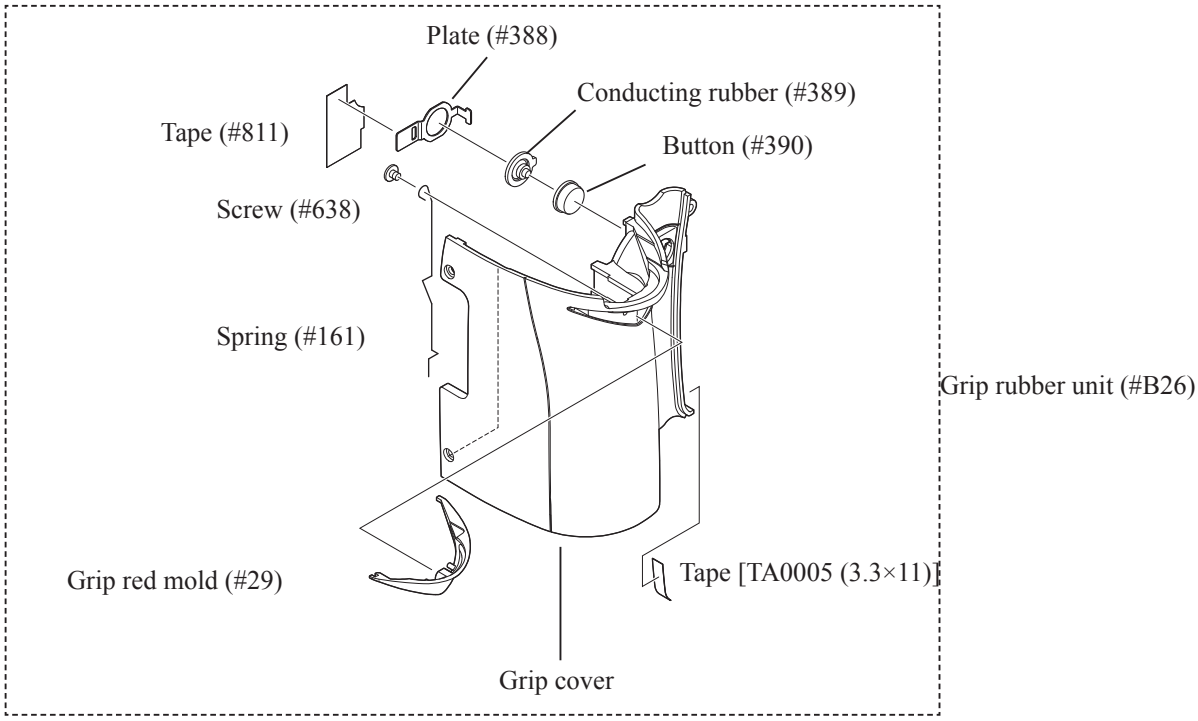

I/F cover

・Remove the IF cover (#71) and the cable release cover (#70).

・Remove the IF cover (#B28).

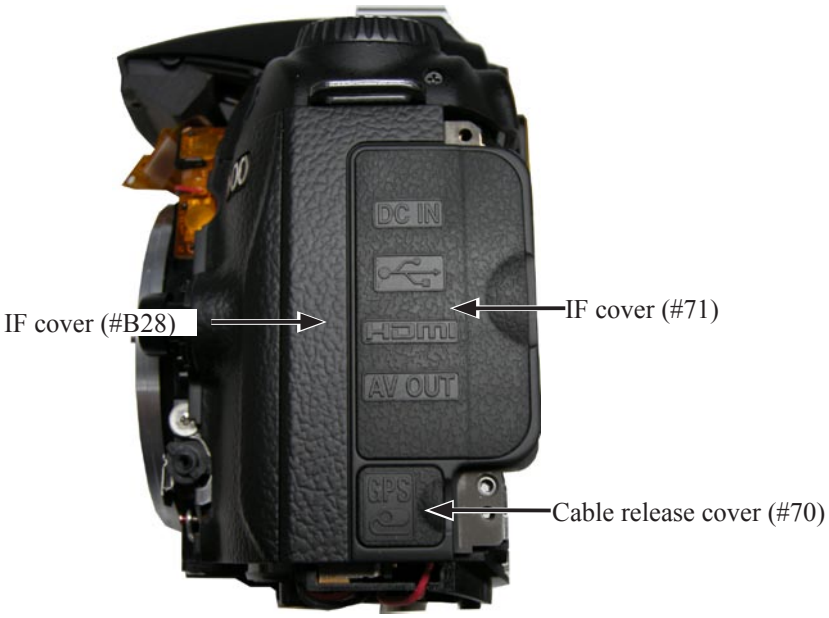

・ Remove the tape (#755) from the IF cover (#B28).

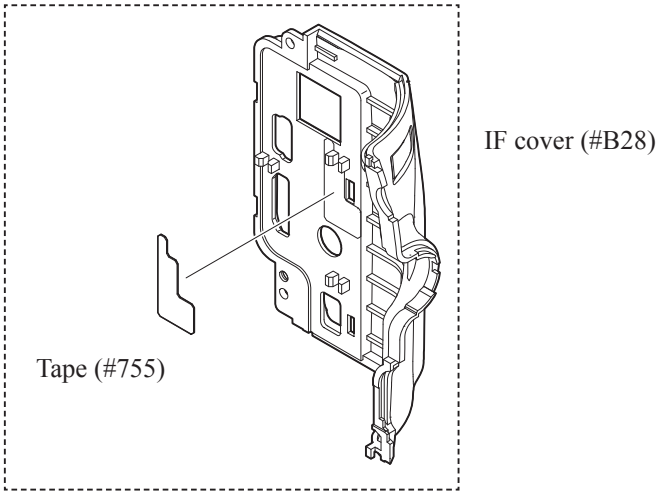

⚠ WARNING

- There are high voltege parts inside. Be careful of this electric shock, when you remove the cover.
- You must discharge the main condenser according to the instruction of this repair manual after you remove the cover.

・Pass the tip of the discharging device straight through the round-hole as below.

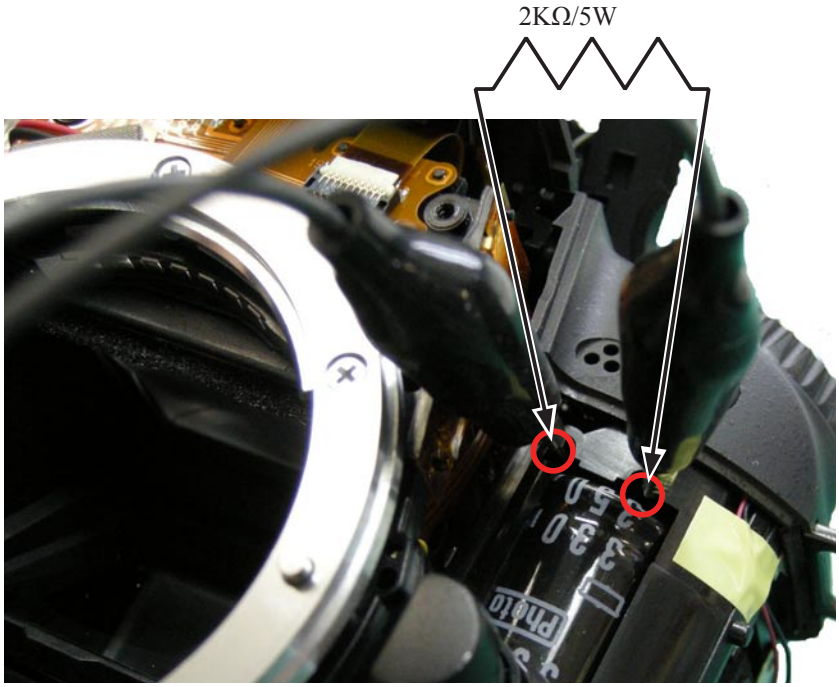

Inside of round-hole

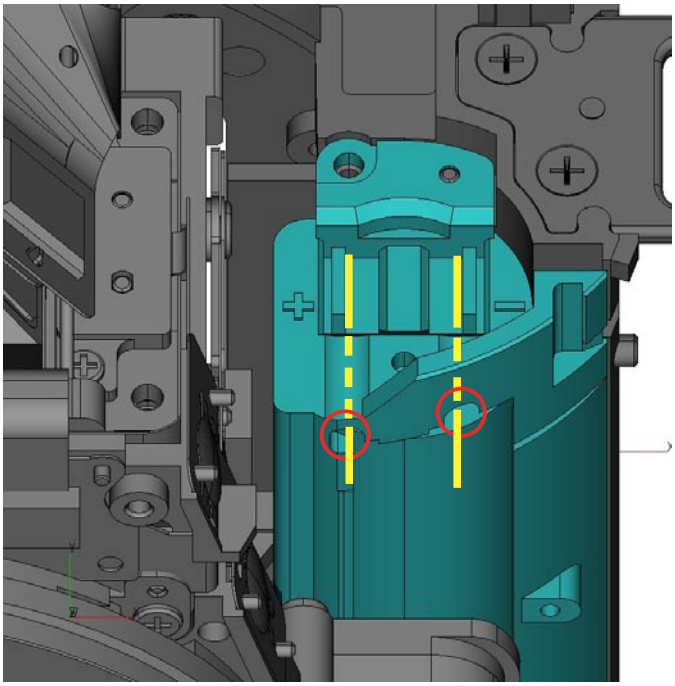

Removal of top cover

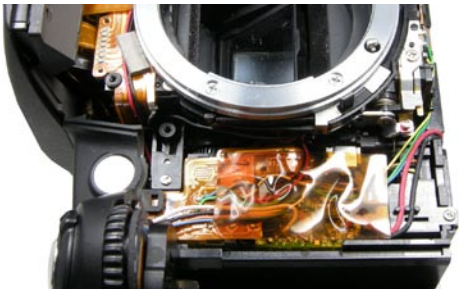

・Peel off the tape (#831).

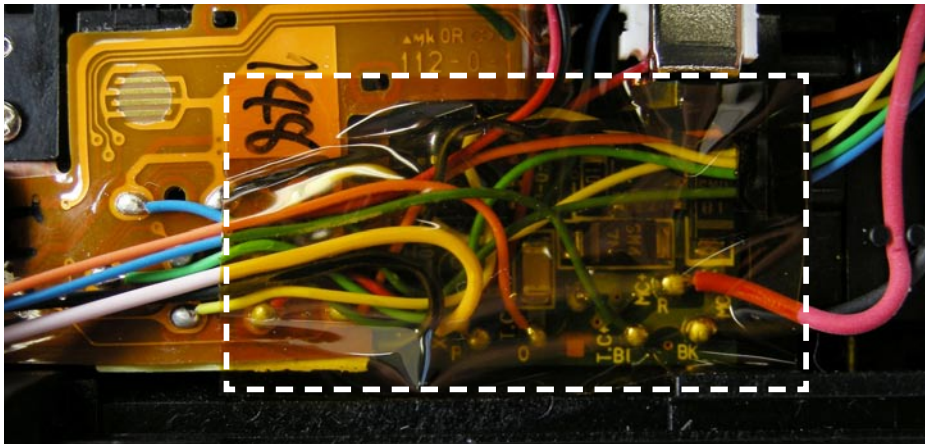

・Unsolder the wires (Black/Pink/Orange/Blue) of the top cover.

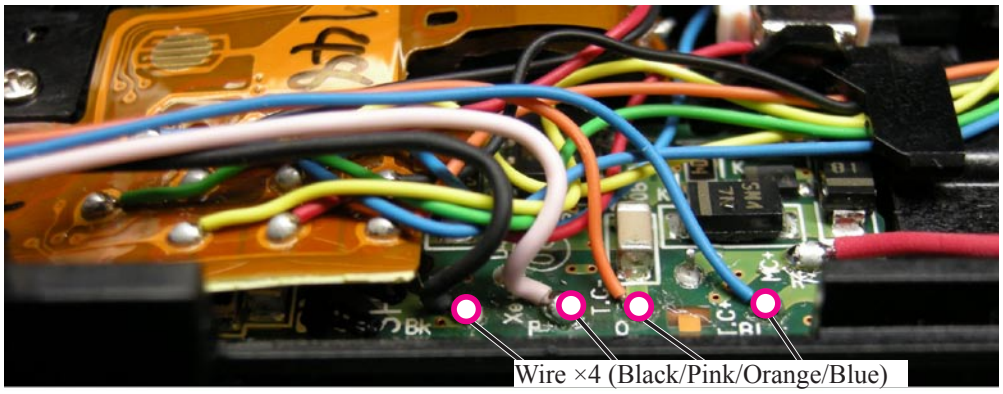

・Remove the wires from the grooves.

・Unsolder the wires (Blue/Green/Yellow) of the preview unit.

・Unsolder the wires (Red/Black) of the main condenser.

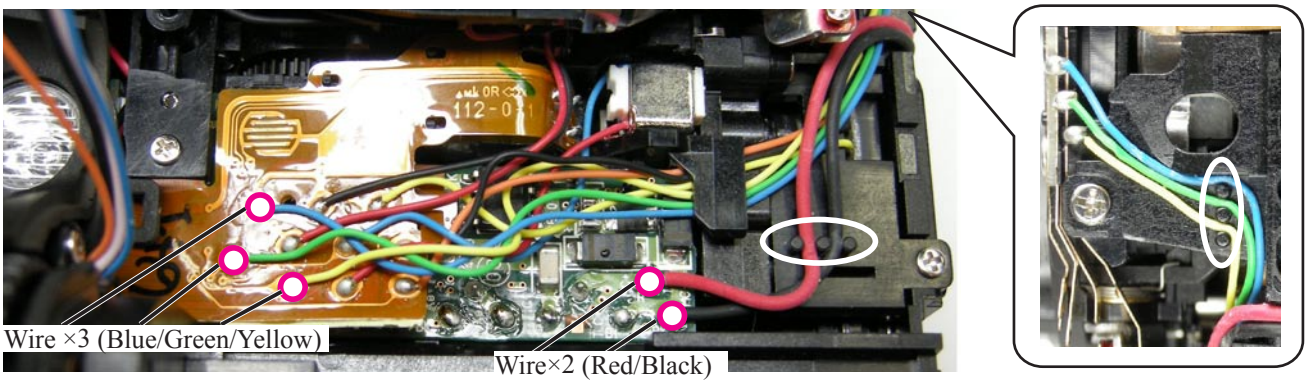

・Peel off the diopter adj knob cover (#280).

・Remove the screw (#288).

・Remove the sponge (#287) from the diopter adj knob (#282).

・Remove the roller (#281) from the body.

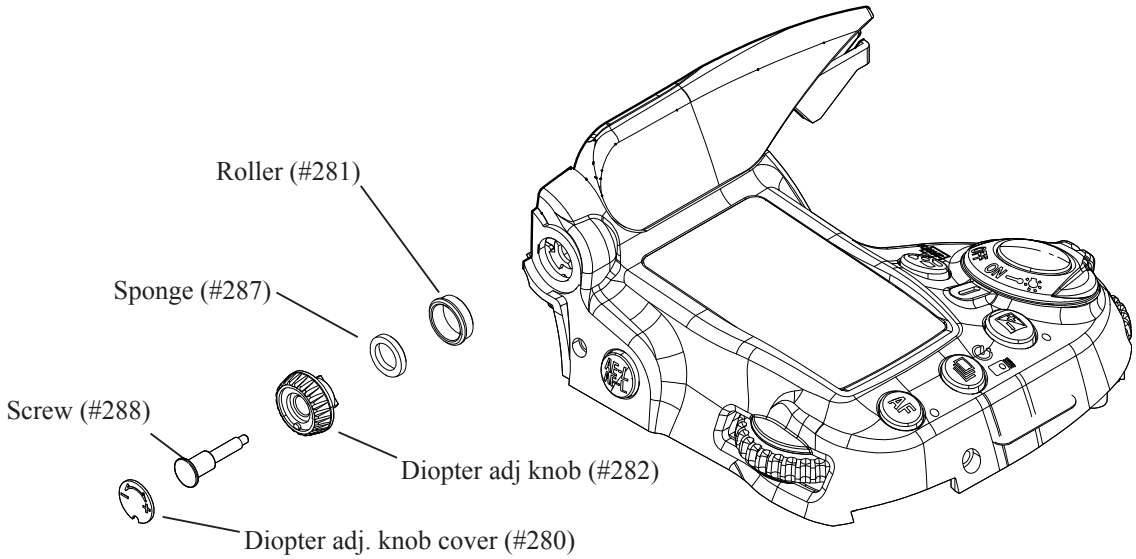

・Take out the screw (#636).

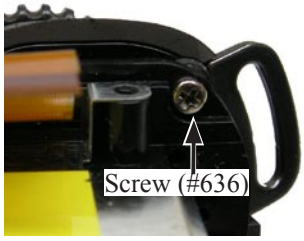

・Take out the two screw (#657).

・Take out the two screw (#677).

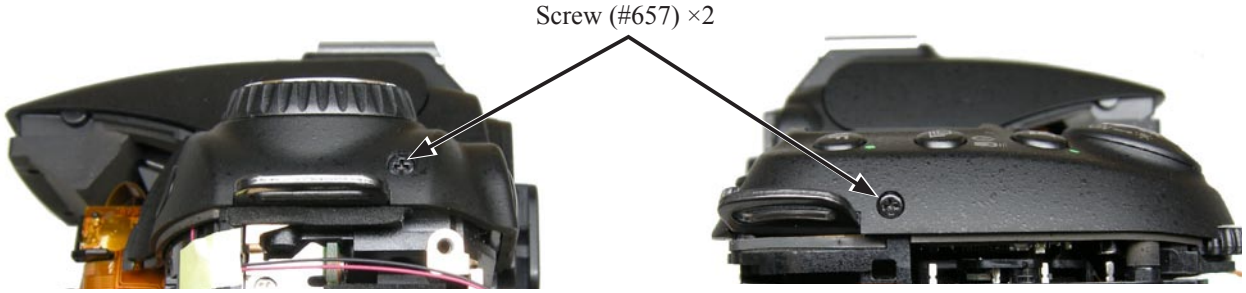

・Peel off the tape [TA-0005 (6×10)].

・Remove the wires of the microphone (#1051) from the cutout of the body.

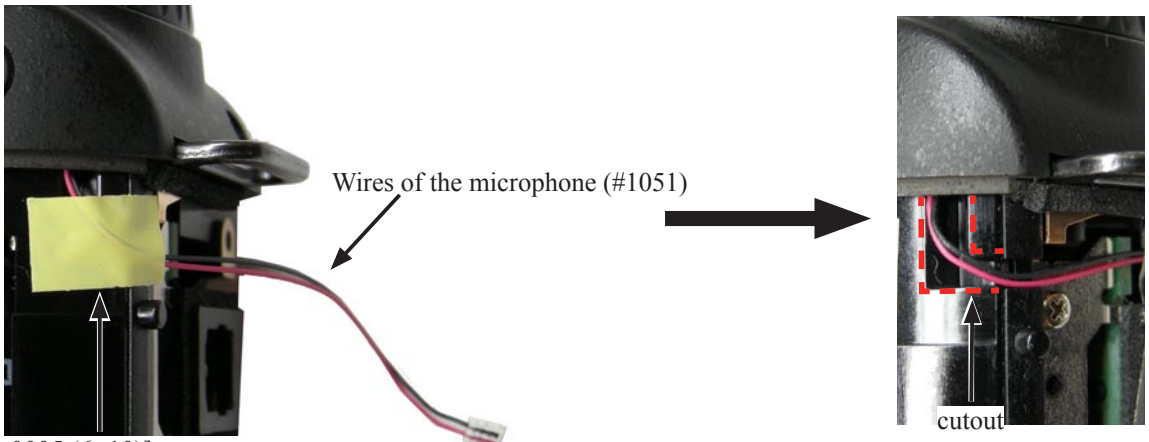

・Disconnect the FPC from the connector of the top cover unit (#B23RP).

・Remove the top cover unit (#B23RP).

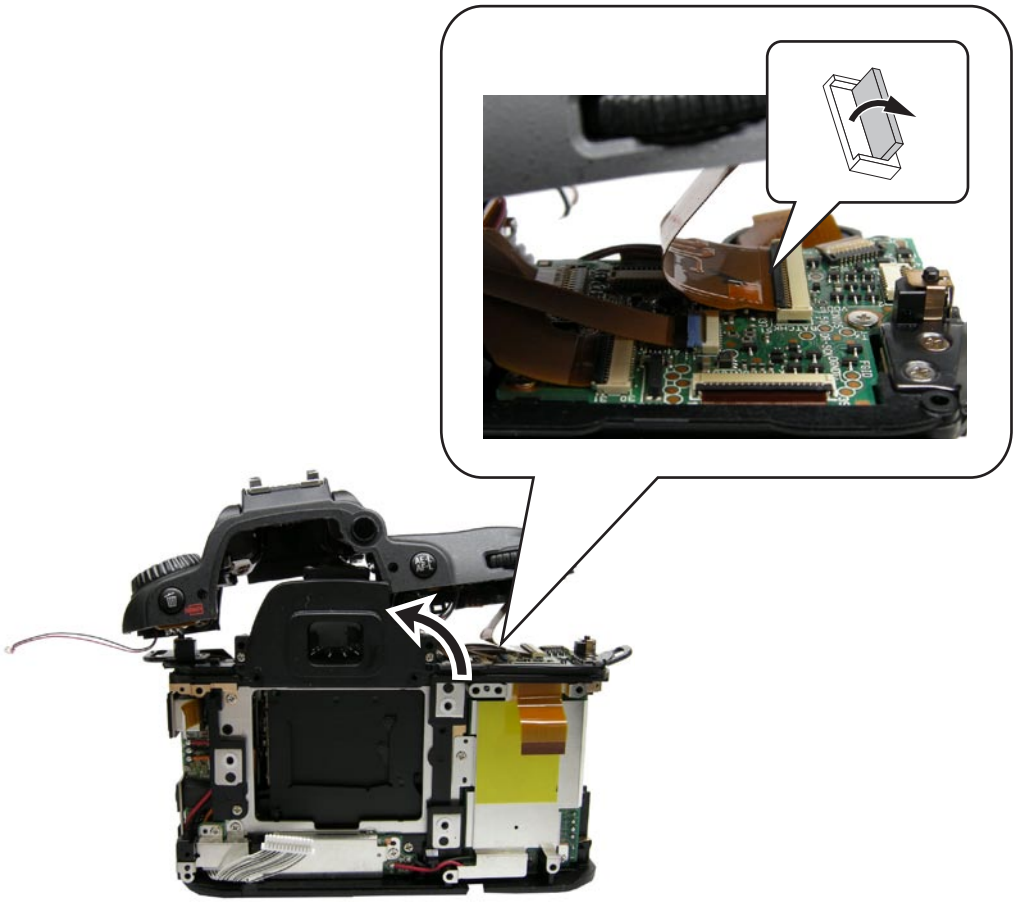

3. Top cover

AF-assist lamp unit

- Unsolder the two wires (Black) of the AF-assist lamp unit (#B325).
- Take out the screw (#611).

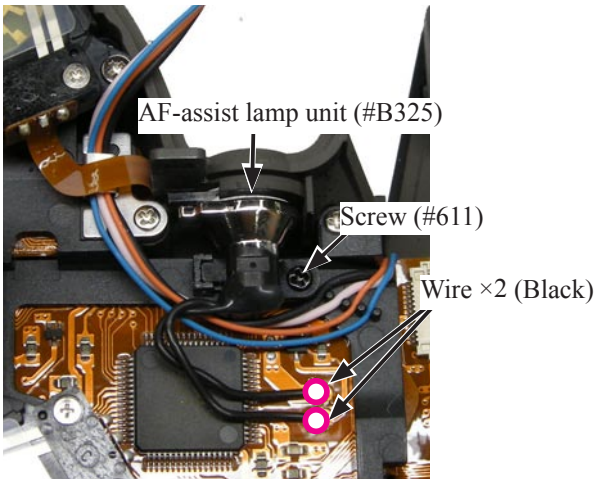

Top cover FPC unit

- Unsolder the wires (Red/Black).
- Unsolder the wires (Brown/Yellow).
- Remove the five solders of the shoe mold unit (#B317).

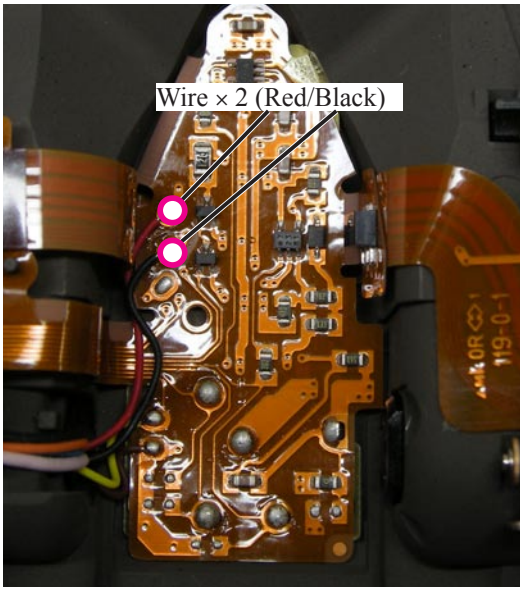

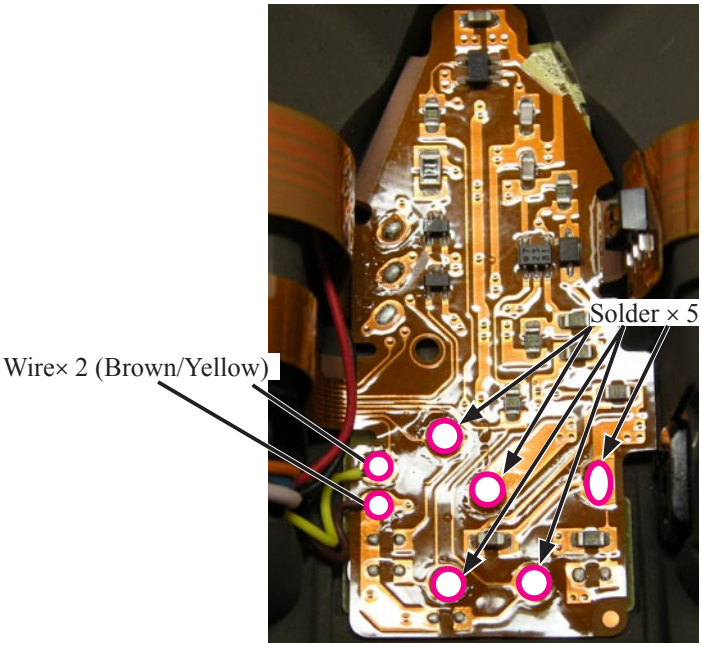

・Disconnect the connector.

・Remove the wires (black/pink/orange/blue) from the two guides.

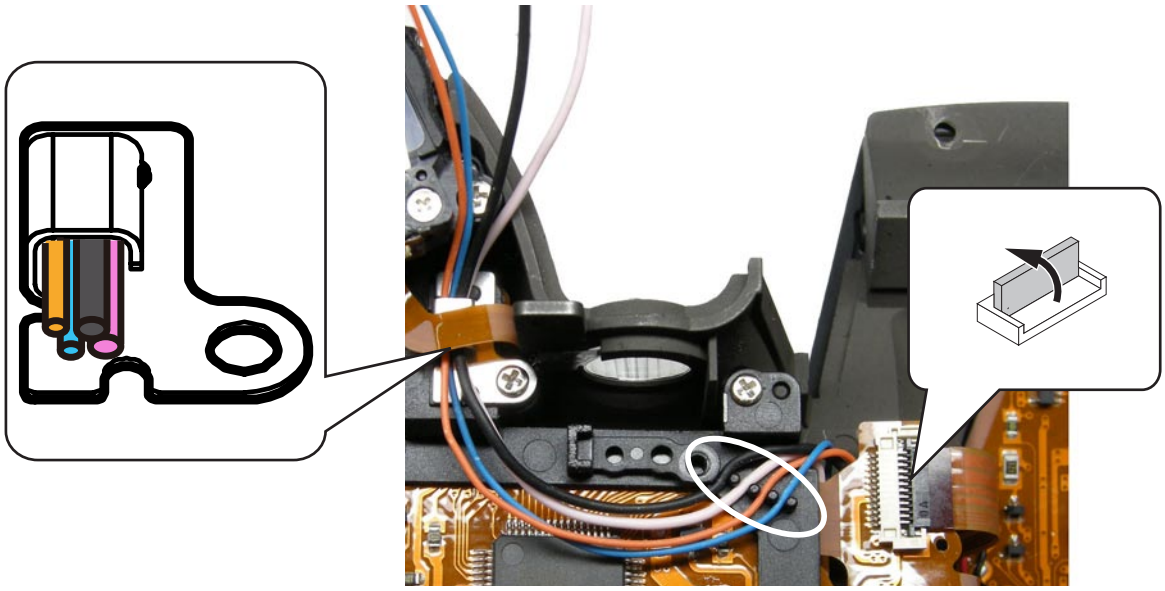

・Remove the six solders, and take out the four screws (#635).

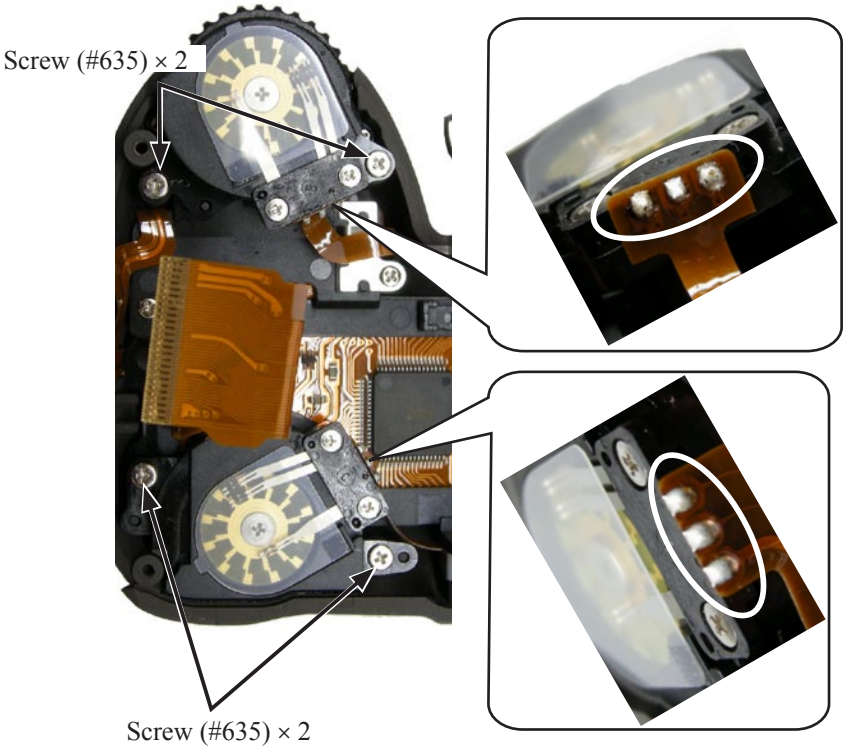

・Remove the MC/D unit (#B367) and the SC/D unit (#B377).

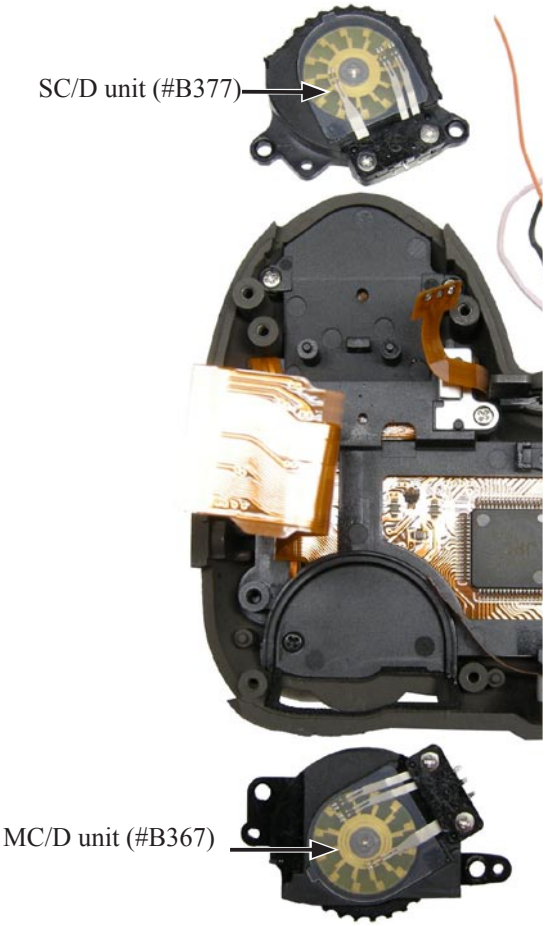

・Take out the screw (#607).

・Take out the screw (#605).

・Take out the screw (#612), and remove the arrangement plate (#340).

・Remove the three screws (#612) which are for the top cover FPC unit (#B1007RP).

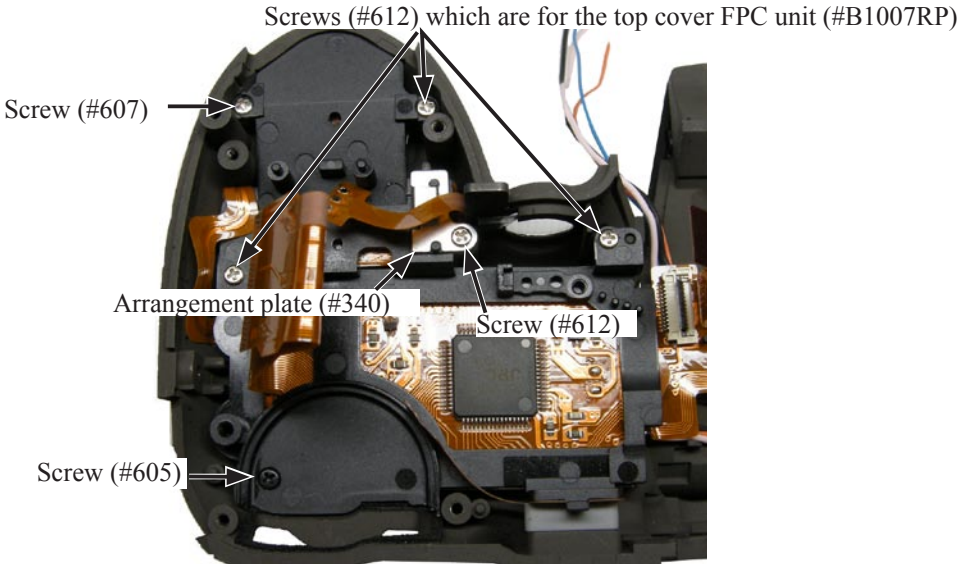

・Remove the top cover FPC unit (#B1007RP).

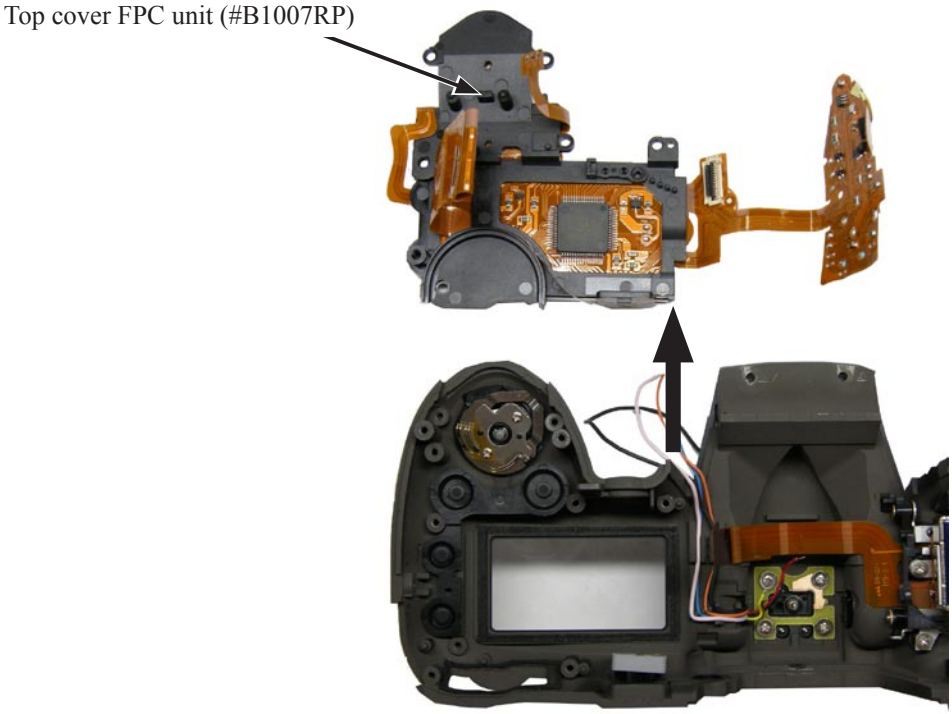

・Peel off the tape (#825).

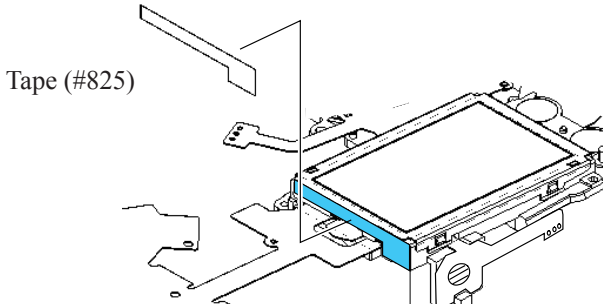

・Unhook the plate (#331) at four places from the top cover FPC unit (#B1007RP).
・Remove the upper LCD (#1044).
・Remove the two conducting rubber (#332).
・Remove the reflection sheet (#334) and the light guide (#333).

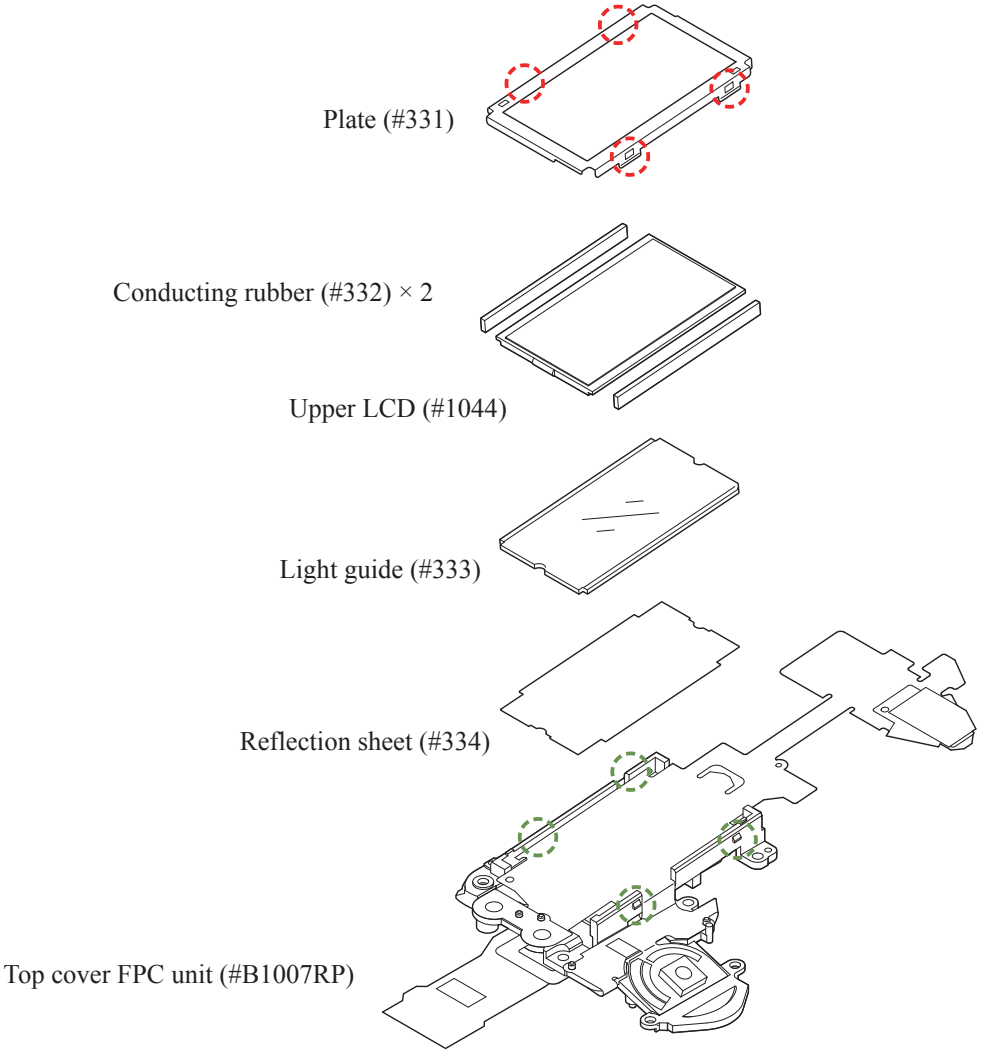

AE-L button

・Remove the conducting rubber (#397) and the button (#381).

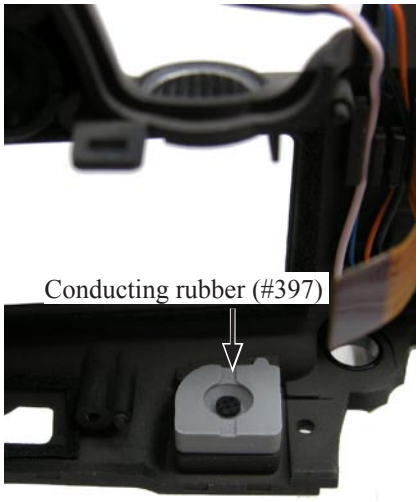

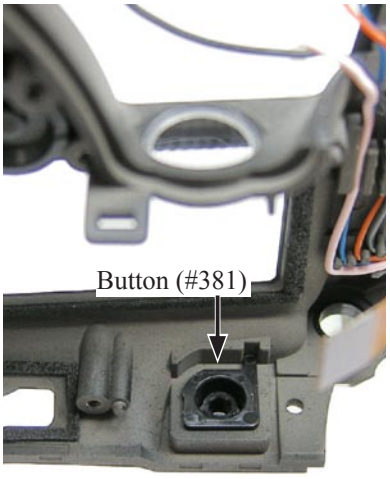

Top cover grip button

・Remove the conducting rubber (#339).

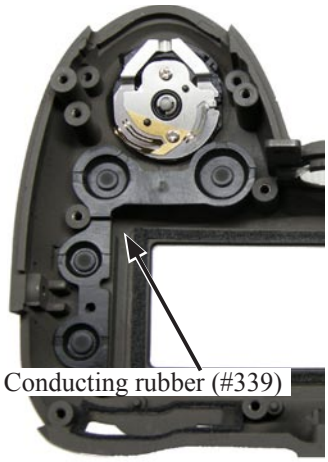

Power dial

・Take out the two screws (#602).

・Remove the contact brush (#348) and the click spring (#347).

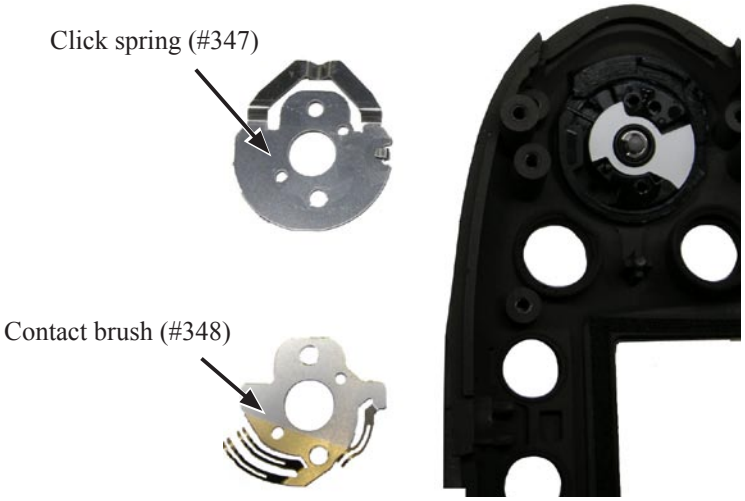

・Peel off the sheet (#352).

・Remove the spring (#346) (carefully to avoid popping out of the spring) and the release button unit (#B350).

Hot shoe

- Take out the four screws (#654).
- Remove the GND plate (#322) and the holder (#321) from bottom.
- Remove the hot shoe (#316), hot shoe spring (#318), and shoe mold unit (#B317).

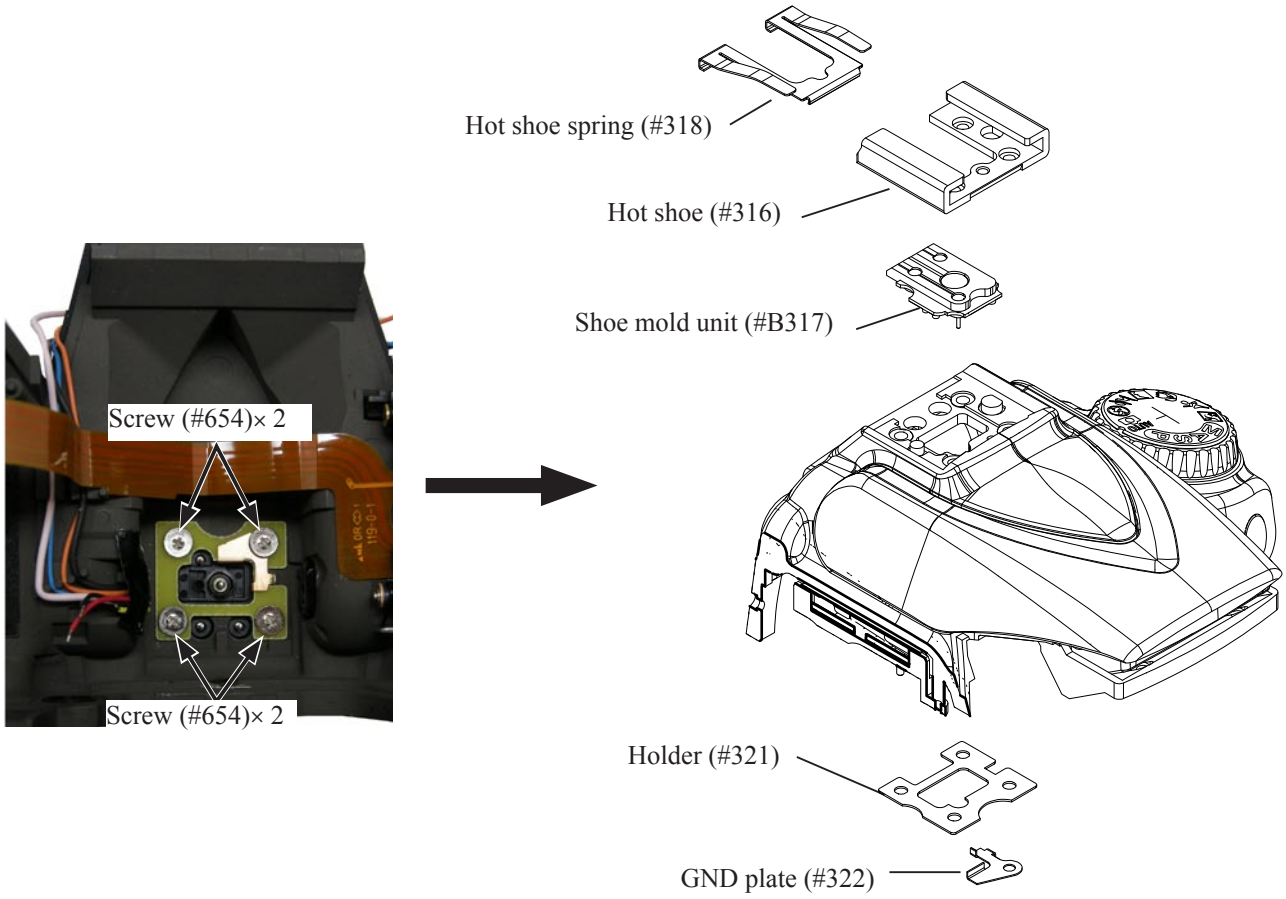

SB upper cover

- Raise the speedlight and take out the two screws (#629).

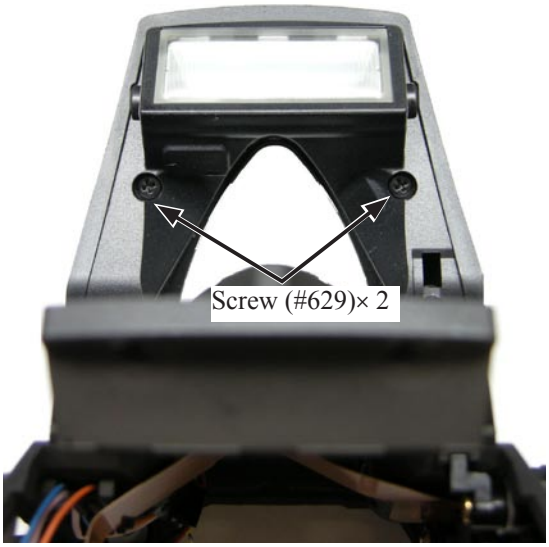

- Unhook by pushing the red dot framed areas( ) as below.
- Put the speedlight down approximately half way.
- Remove the SB upper case (#301).

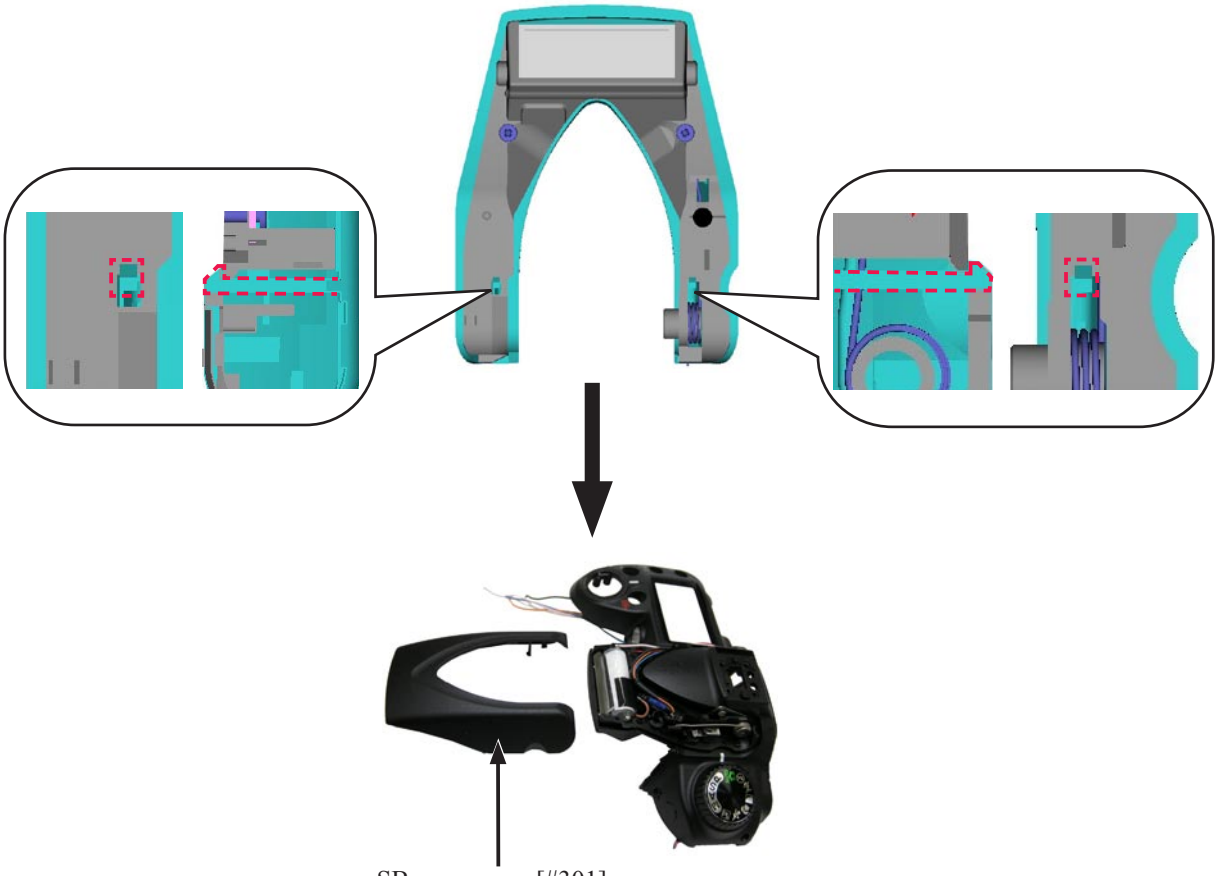

SB upper case [#301]

SB lower control unit

- Remove the wires from the two guides.

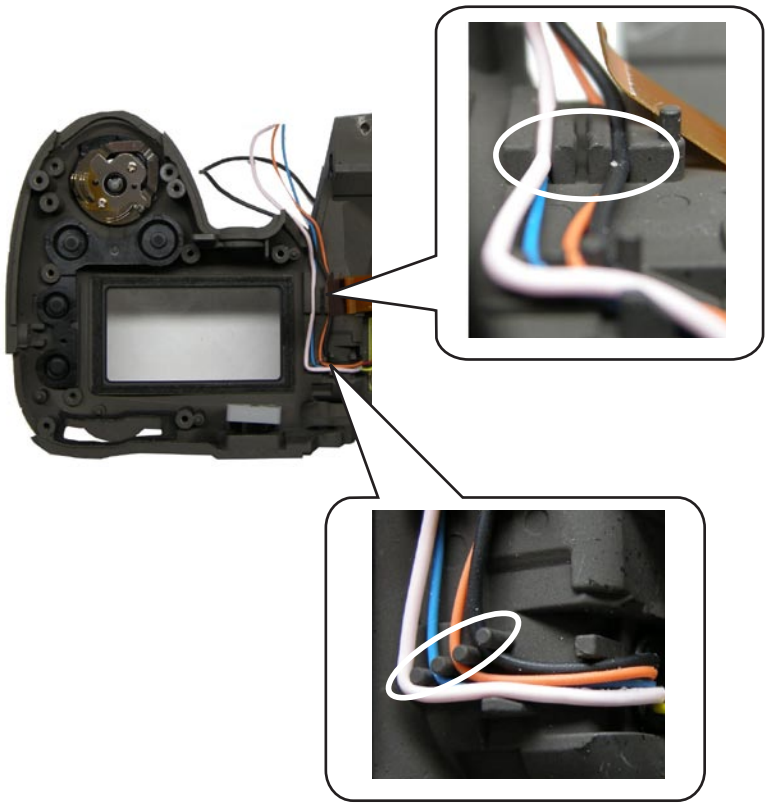

・Pull out the wires.

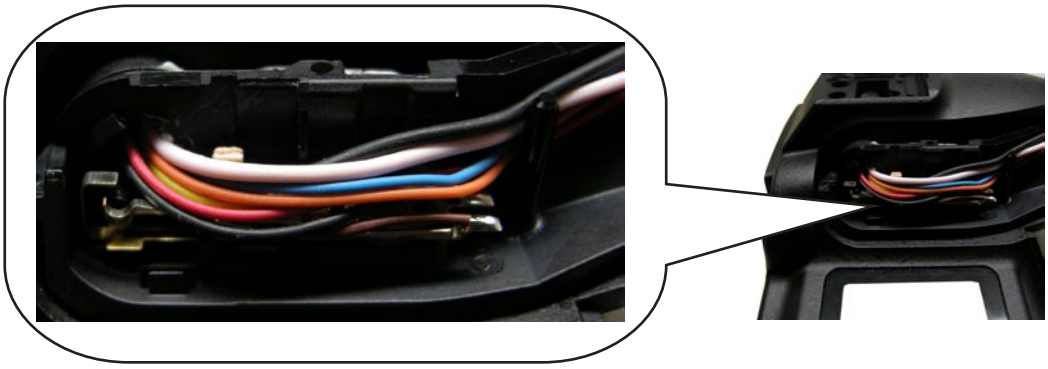

・While holding the rear SB case rotate shaft (#306), take out the screw (#650).

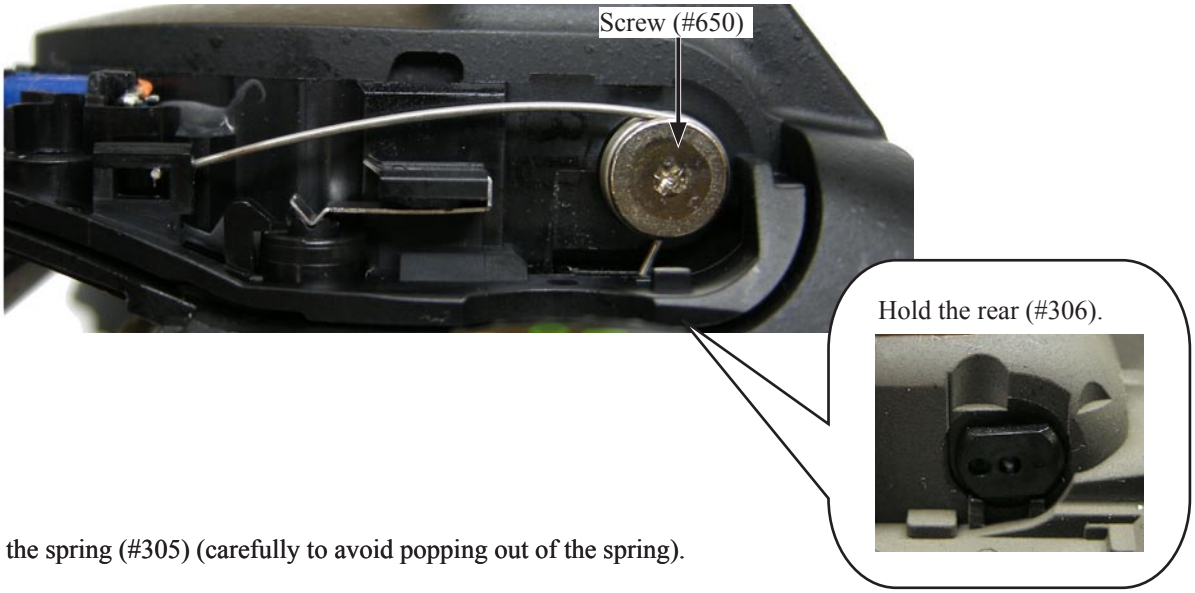

・Remove the spring (#305) (carefully to avoid popping out of the spring).

・Remove the roller (#308) and the SB case rotate shaft (#306).

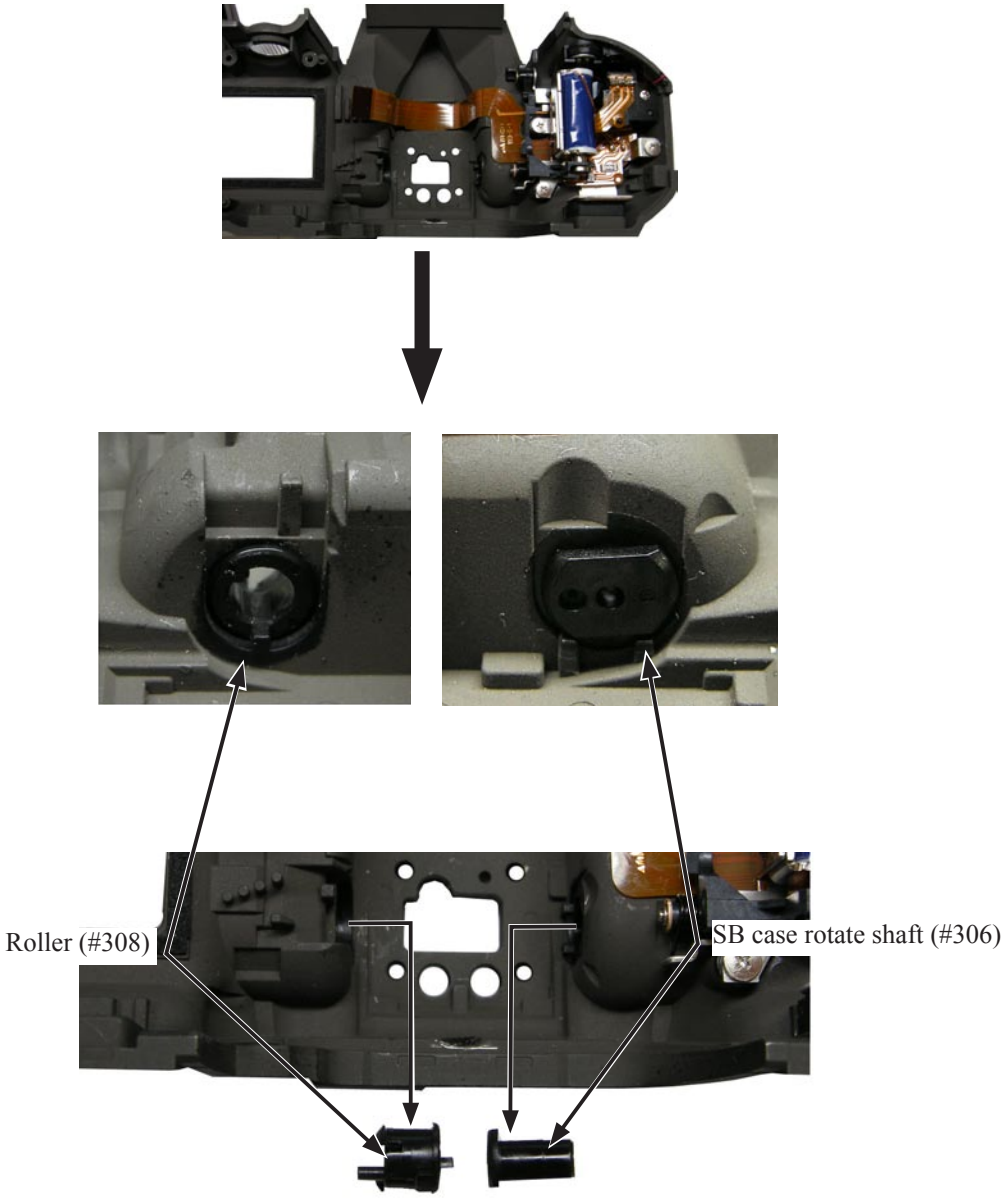

・Remove the SB lower control unit (#B2302).

・Remove the flash pop-up arm A (#B341) and the flash pop-up arm B (#B342).

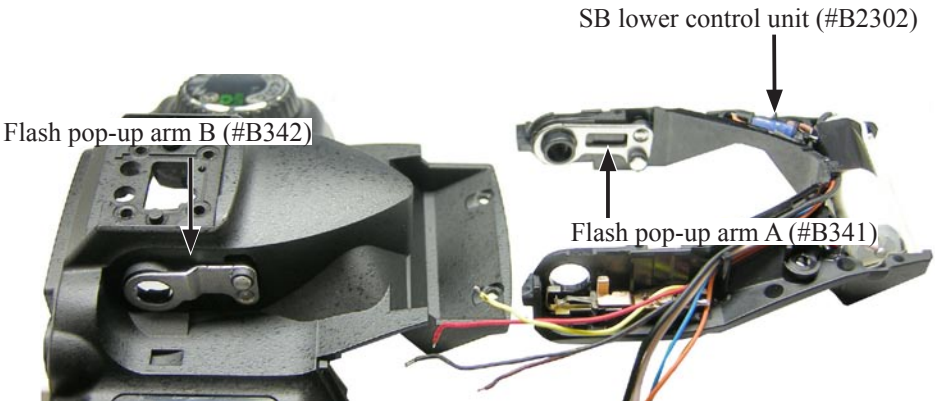

Remote control unit

・Unsolder at three places.

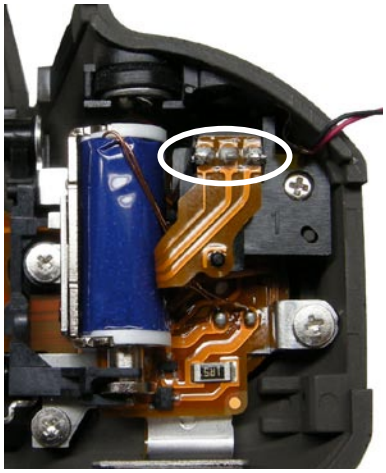

・Take out the screw (#607), and remove the remote control unit (#B1056).

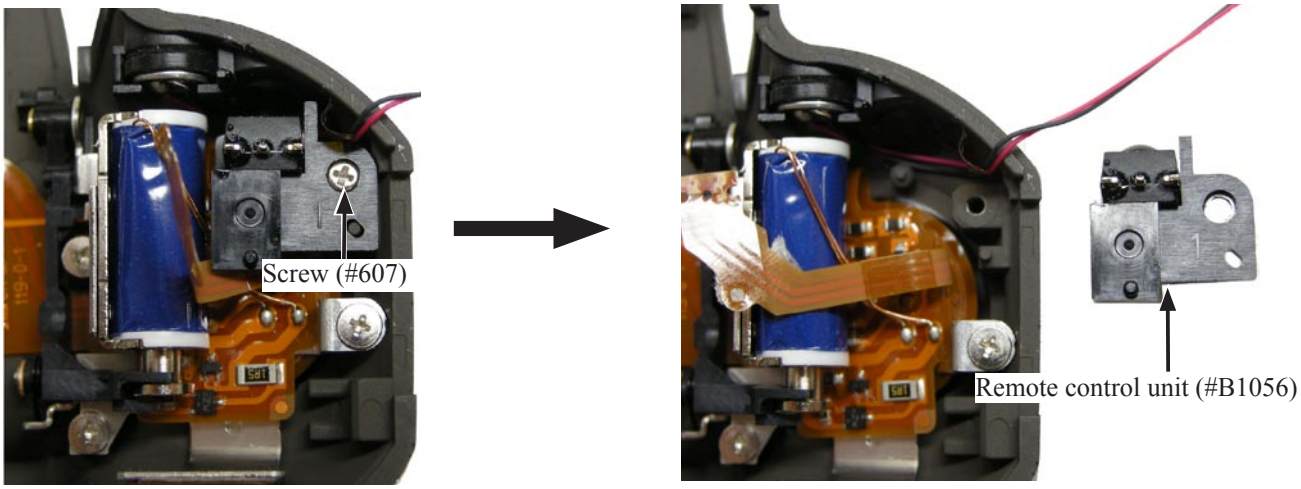

M/D FPC unit

・Take out the three screws (#640).

・Remove the M/D FPC unit (#B2455).

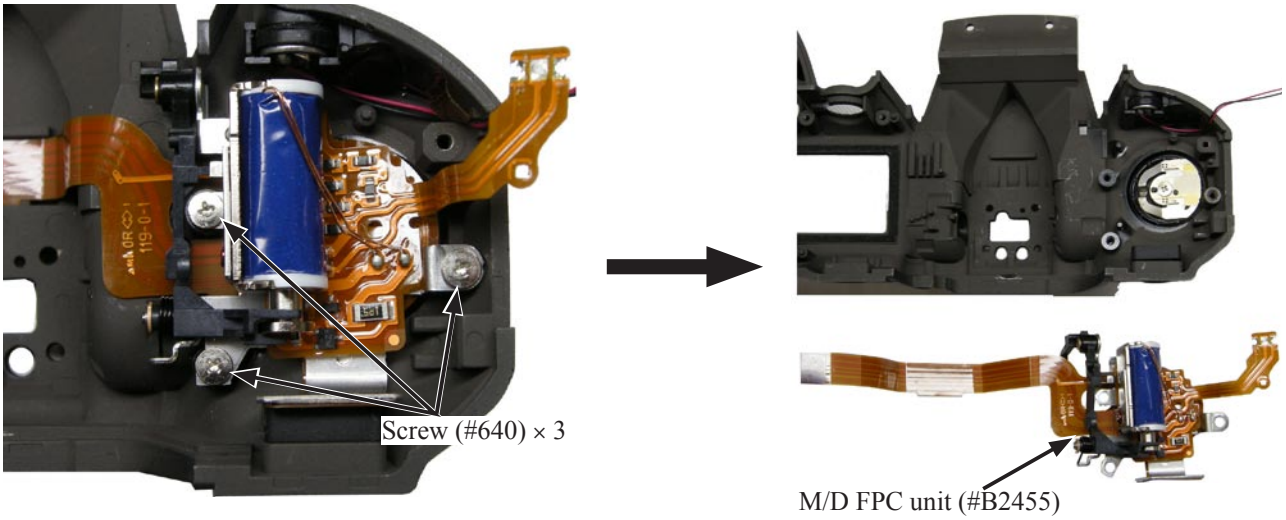

Delete button

・Remove the conducting rubber (#399) and the button (#398).

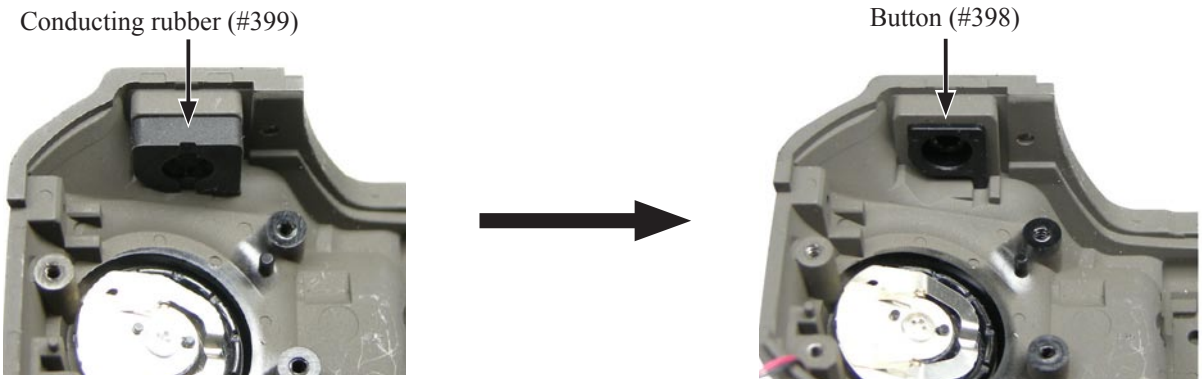

Mode dial

・Take out the screw (#640).

・Remove the mode dial (#451), the click spring (#453) and the contact brush (#452).

・Peel off the tape [TA-0026 (8×8)], and the mode dial cap (#460).

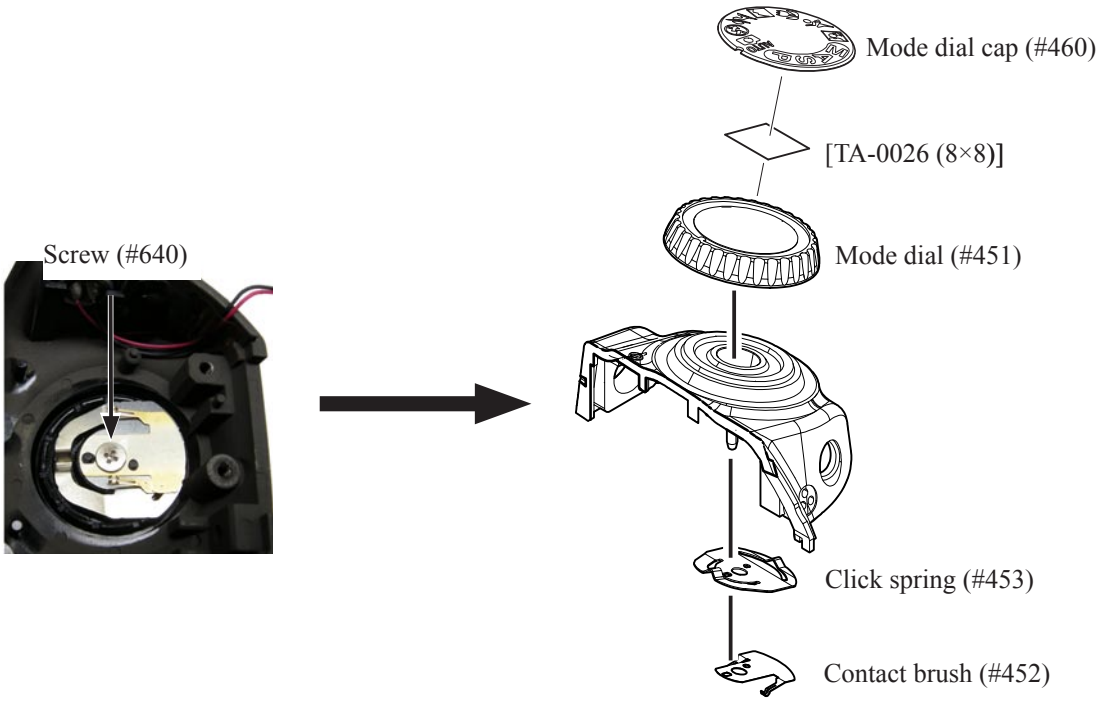

Microphone

・Peel off the tape [TA-0009 (6×6)], and remove the microphone (#1051).

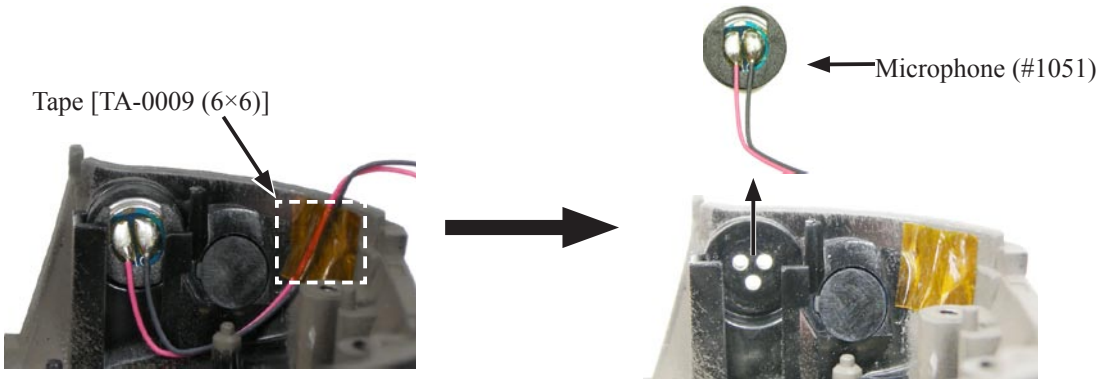

・Peel off the two sponges each (#336 and #337).

・Peel off the two sponges each (#756 and #758).

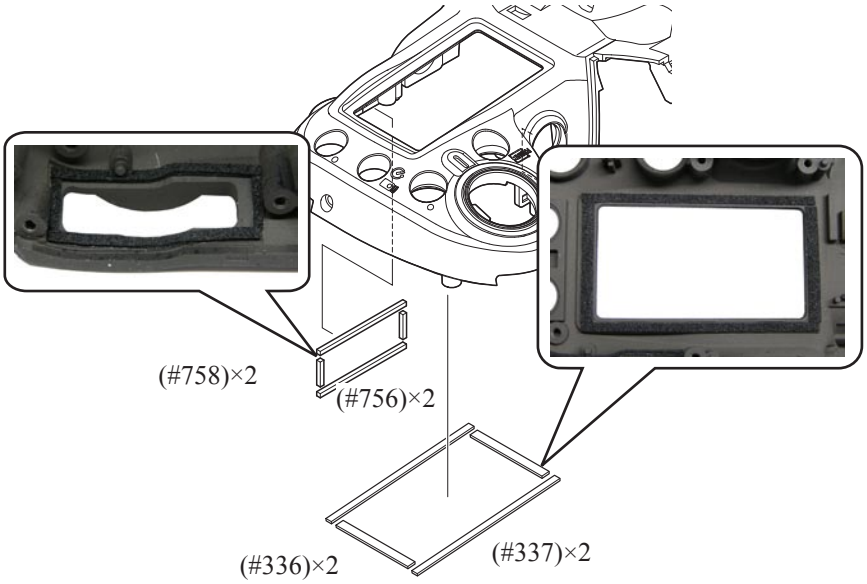

・Remove the AF-assist lamp protector (#326).

・Remove the remote control window (#463).

・Peel off the double-stick tape (#338), and remove the LCD window (#335).

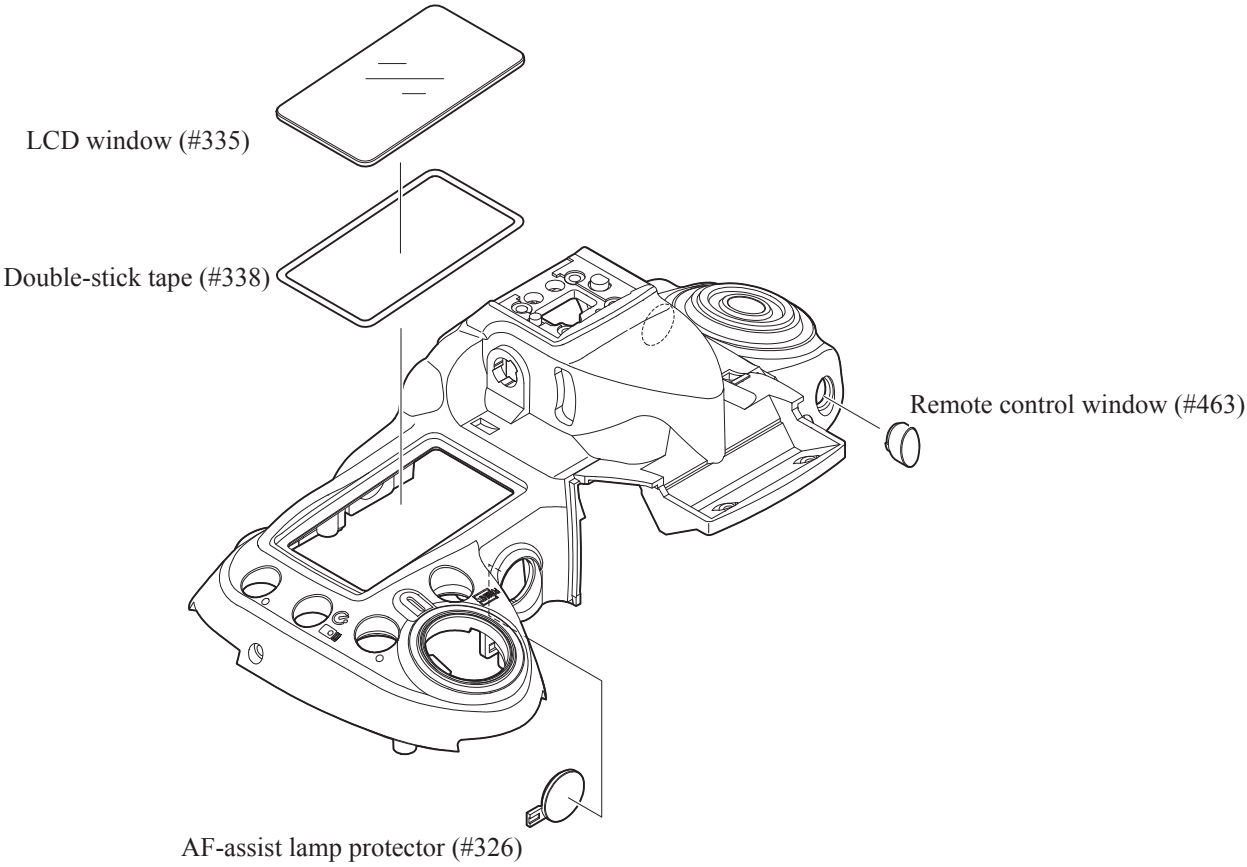

Removal of the main condenser

・Unsolder the wires (Red/Black).

・Take out the screw (#683).

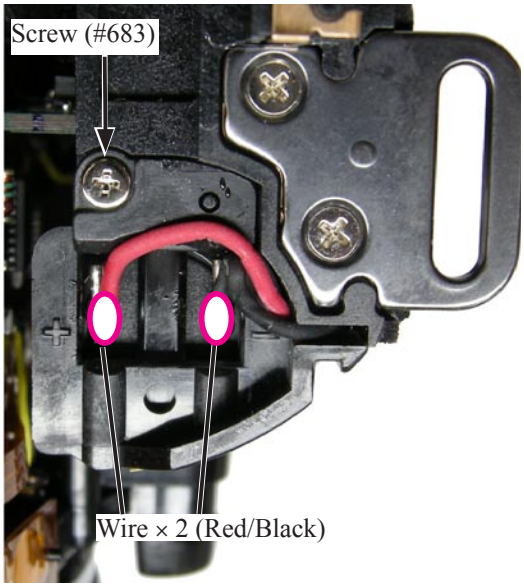

・Remove the main condenser unit (#B42).

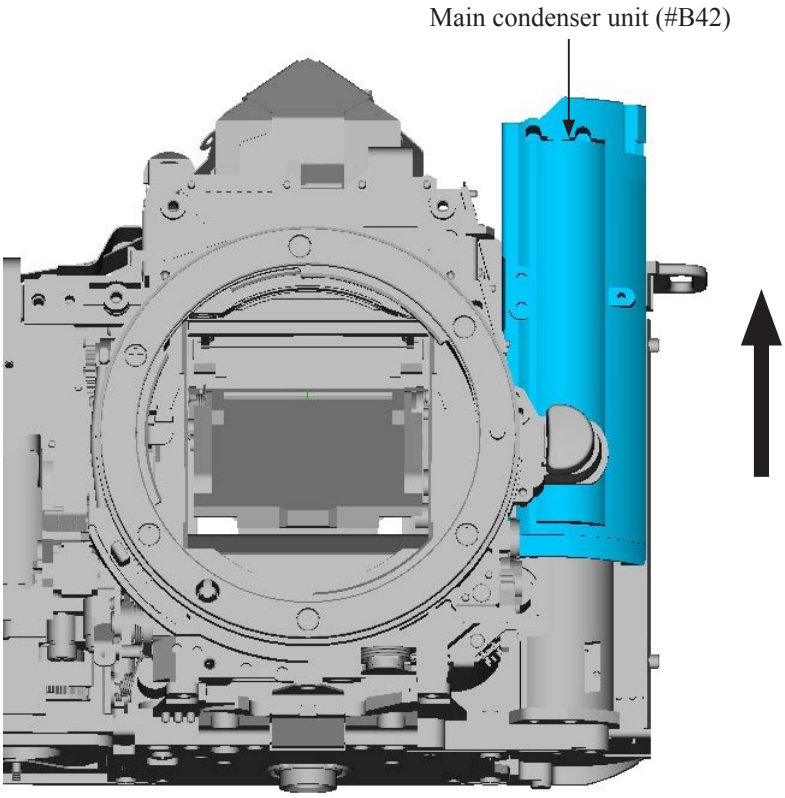

Main PCB unit

・Unsolder the wires (Red/Black) of the front body FPC.

・Disconnect the connector at five places.

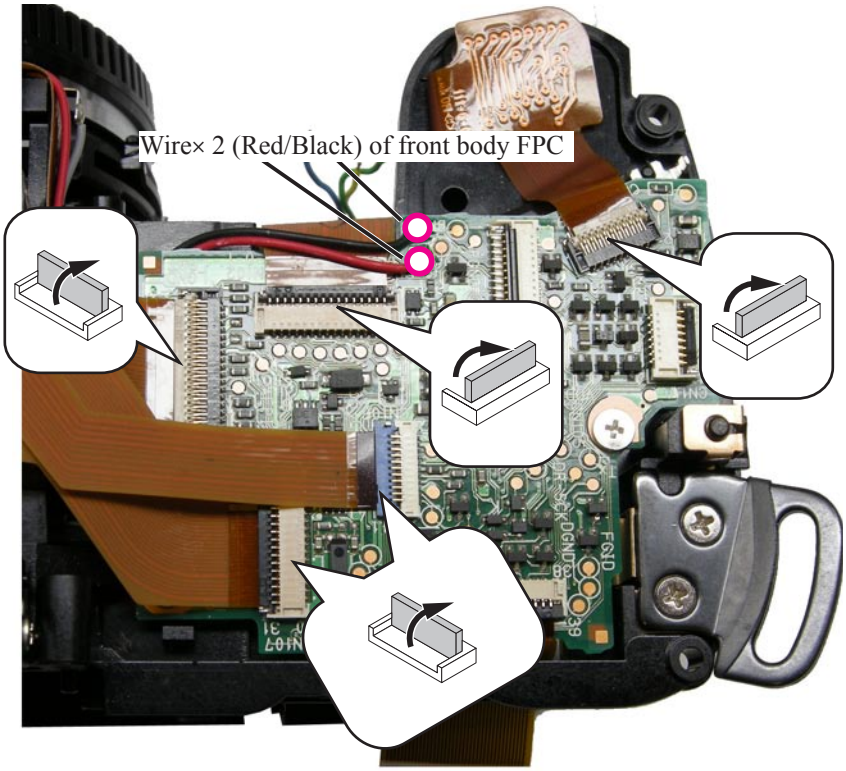

・Take out the two screws (#640).

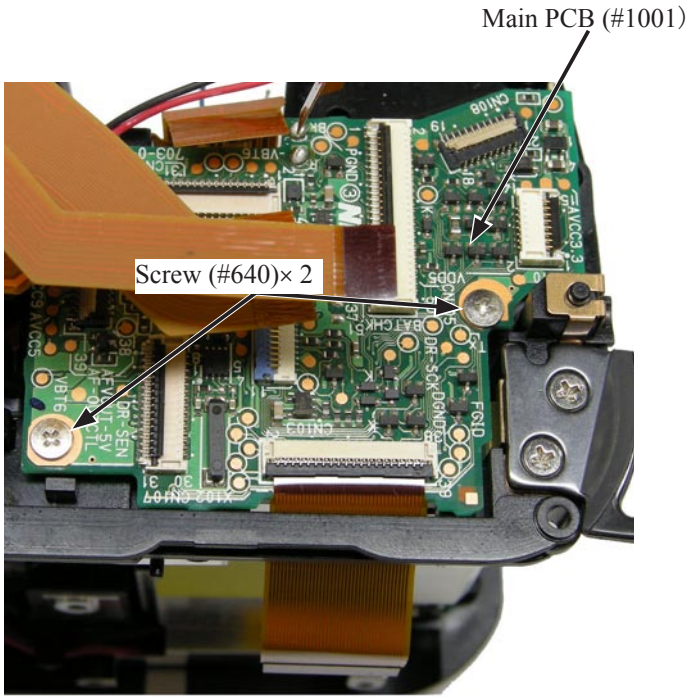

・Remove the main PCB (#1001), being careful of the connector.

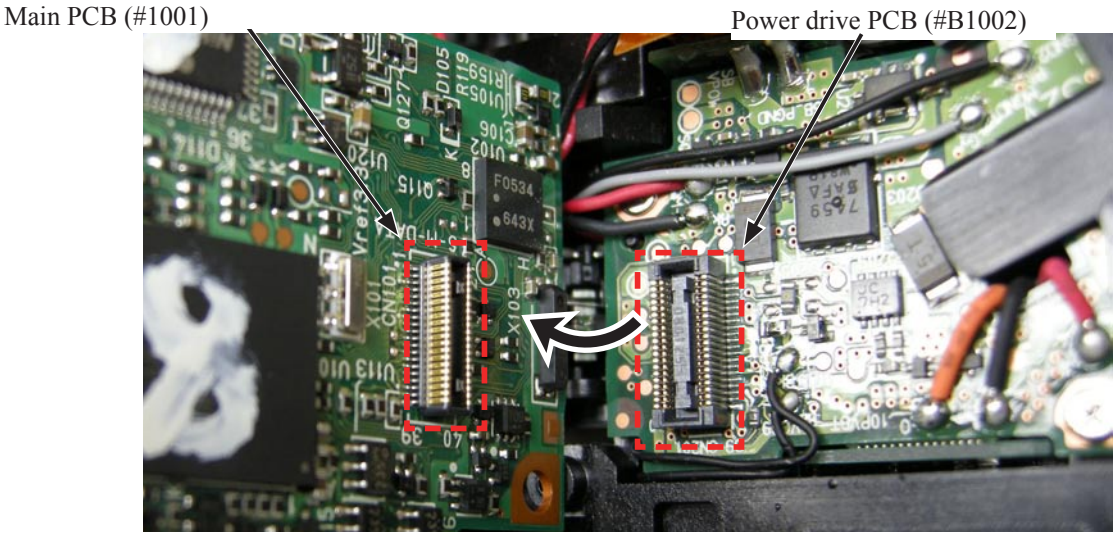

4. Separation of Front body from Rear body

- Remove the solder bridge at two places on the power drive PCB (#B1002).
- Unsolder the wires (Black/Gray) of the mount GND.
- Unsolder the wires (Black/Red) of the SQ motor.
- Unsolder the wires (Black) of the buzzer unit.

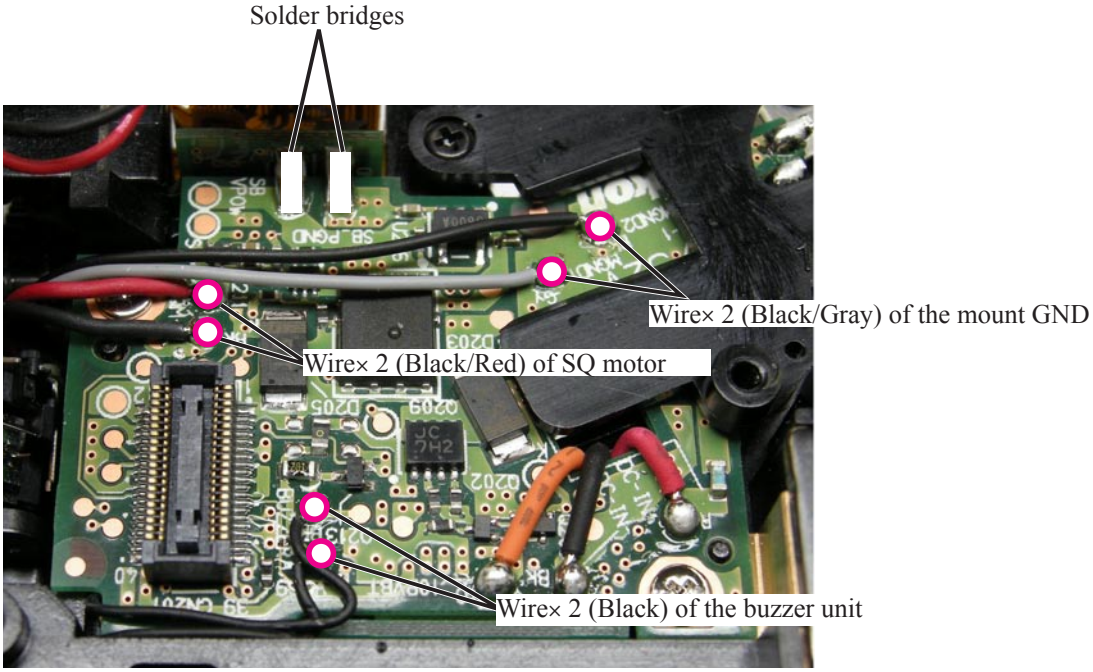

Eyepiece mold

- Take out the two screws (#615).
- Remove the sponge (#752), the eyepiece mold (#291), and the sponge (#779).

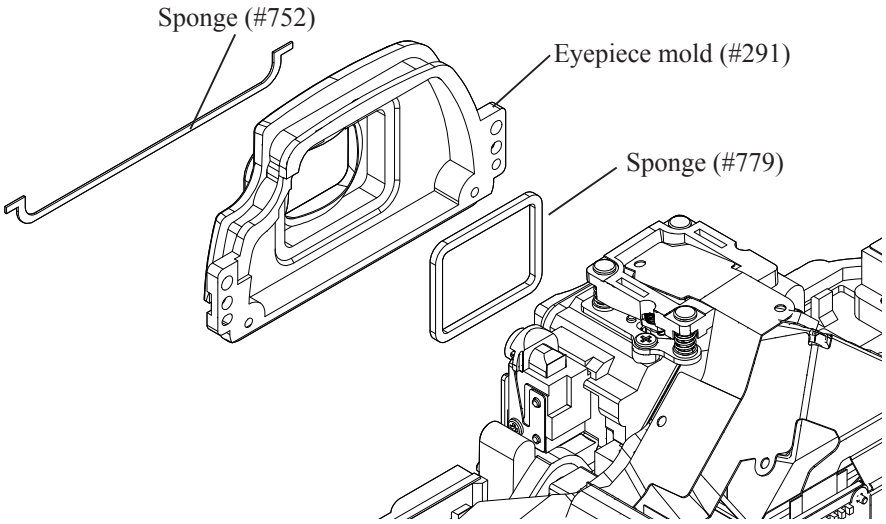

・Take out the two screws (#702), four screws (#706), and two screws (#615).

・Remove the front body unit from the rear body.

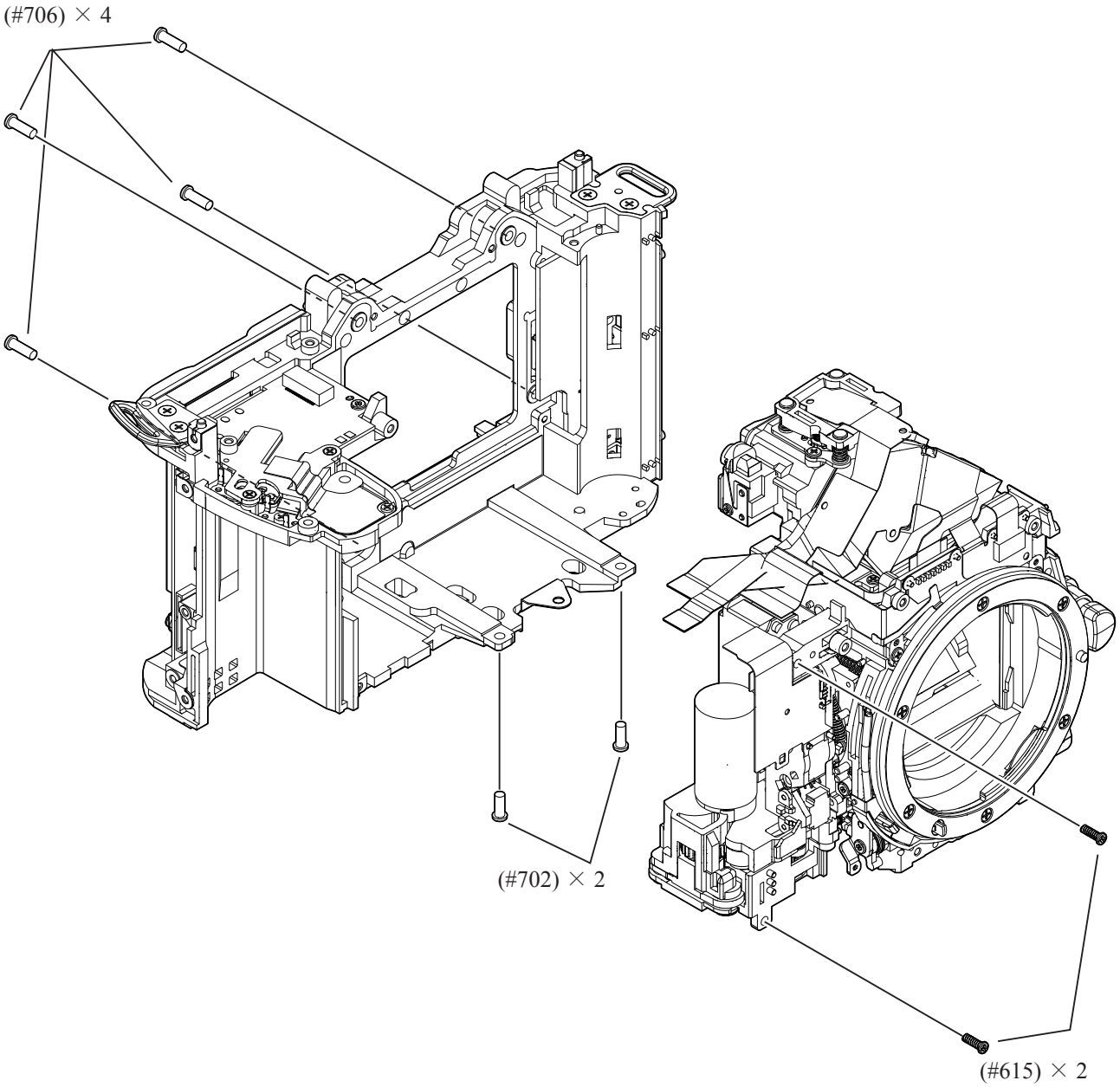

5. Rear body

SB/IF PCB

- Unsolder the wires (Red/Black/Orange).
- Take out the two screws (#612).
- Remove the SB/IF PCB unit (#B1041).

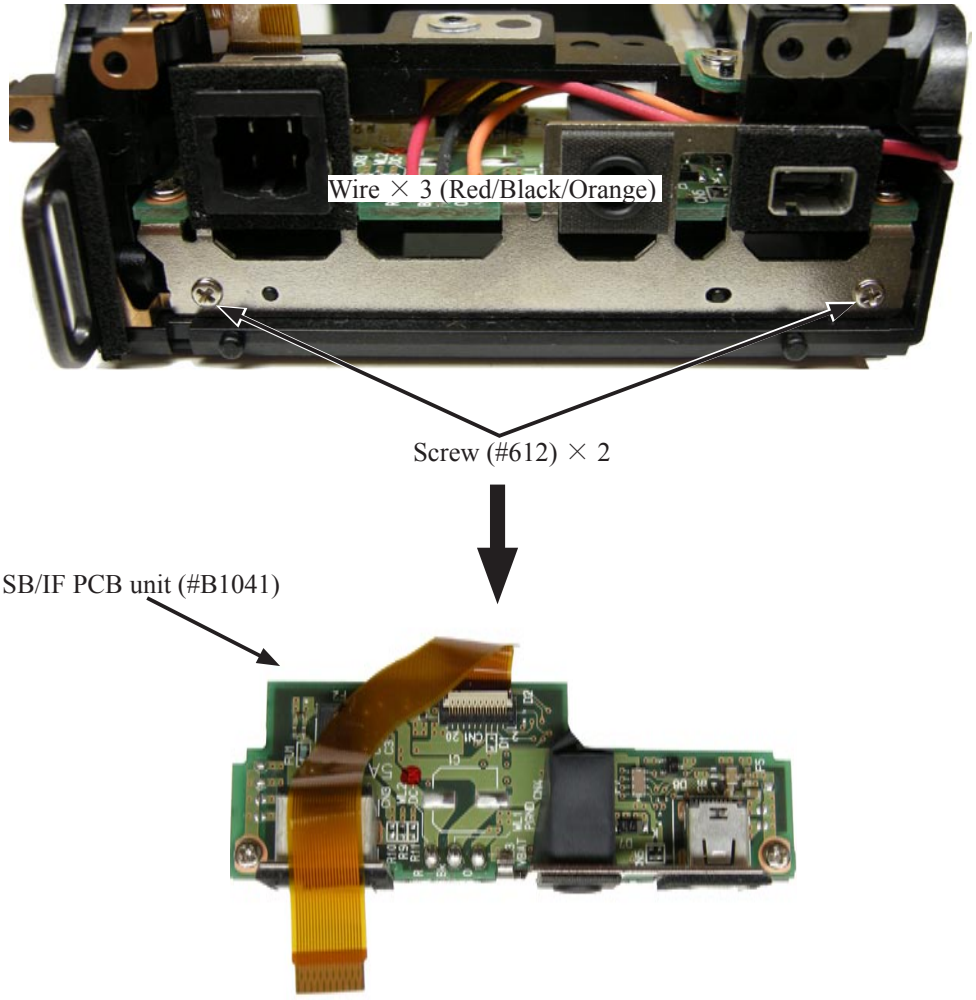

DC/DC PCB

- Take out the two screws (#683).
- Remove the GND plate unit (#B109).

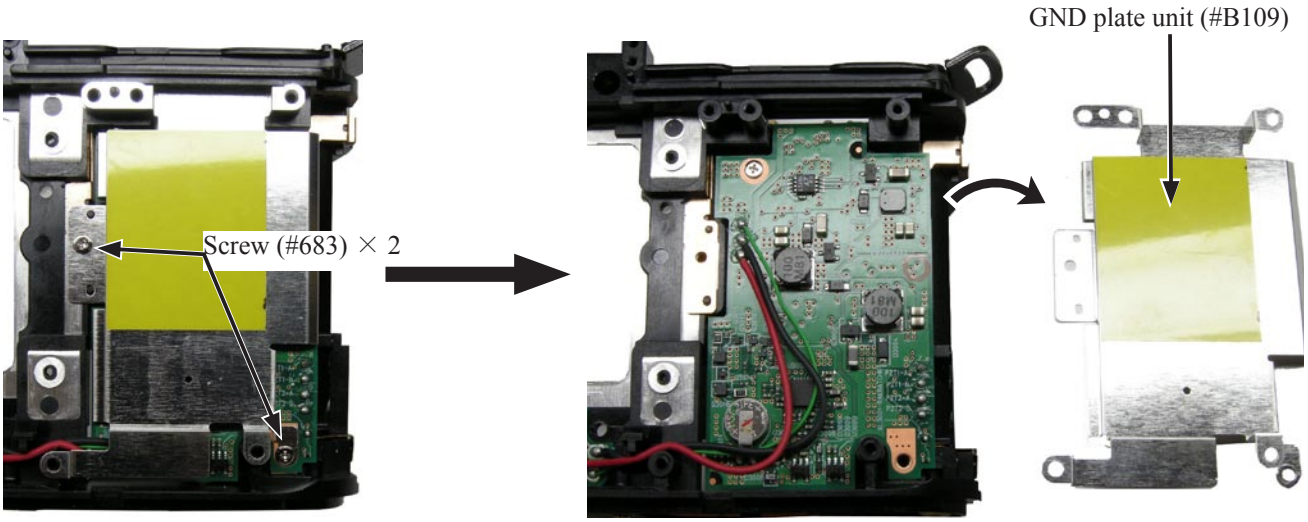

・Unsolder the wires (Red/Black/Green).

・Take out the screw (#683).

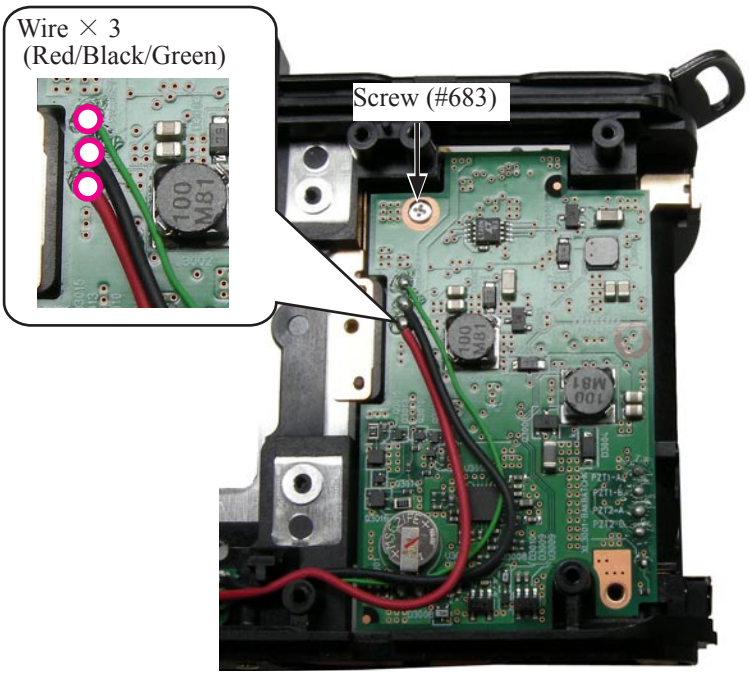

・Remove the DC/DC PCB (#B1030).

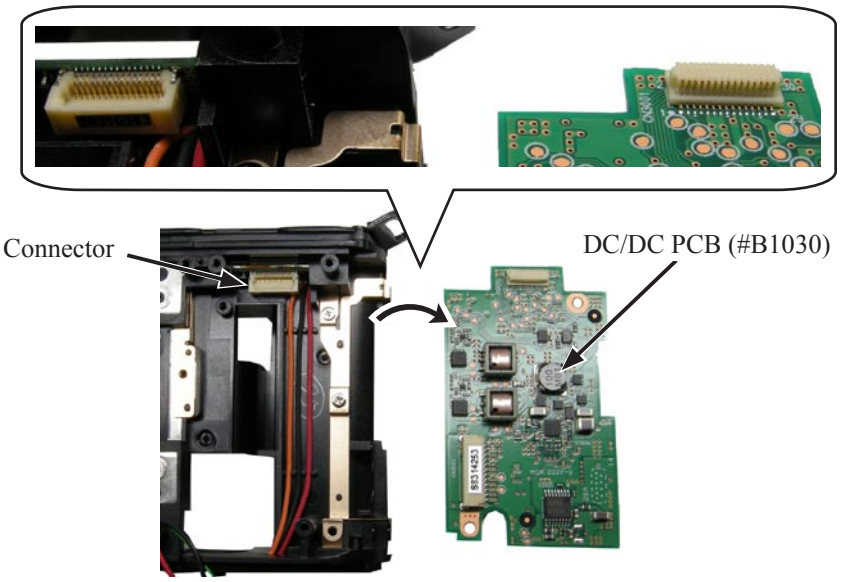

・Take out the two screws (#683).

・Unhook the GND plate (#110).

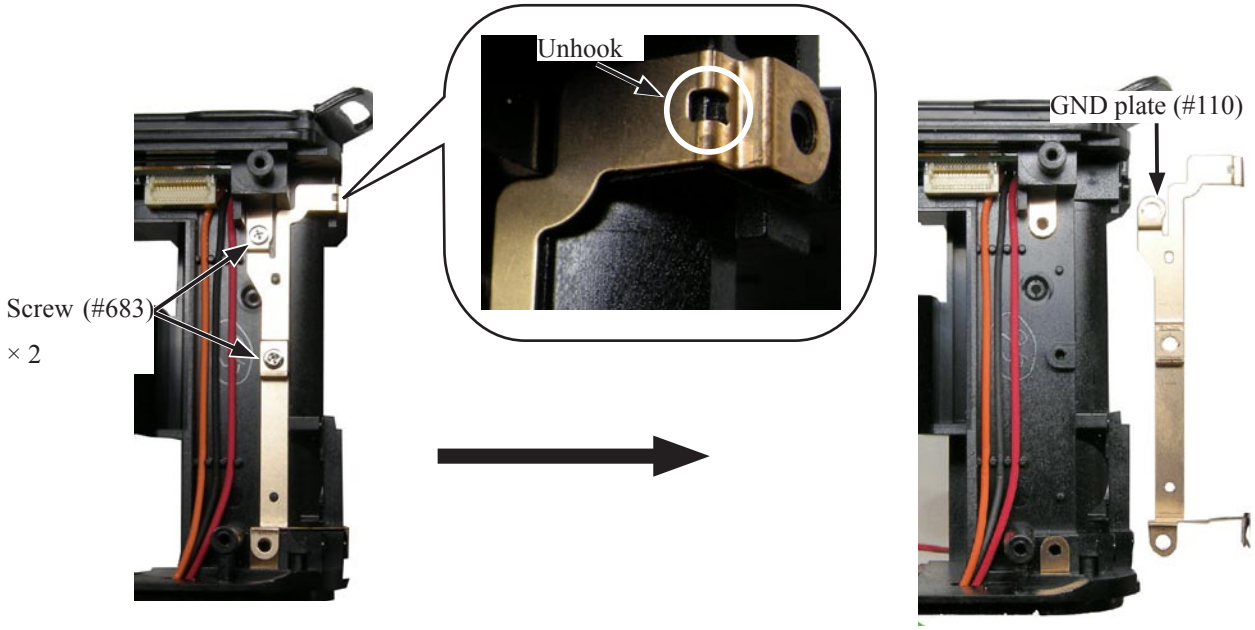

Imaging power PCB unit

・Take out the three screws (#683).

・Remove the shield plate (#B108) and the imaging power PCB unit (#B1029).

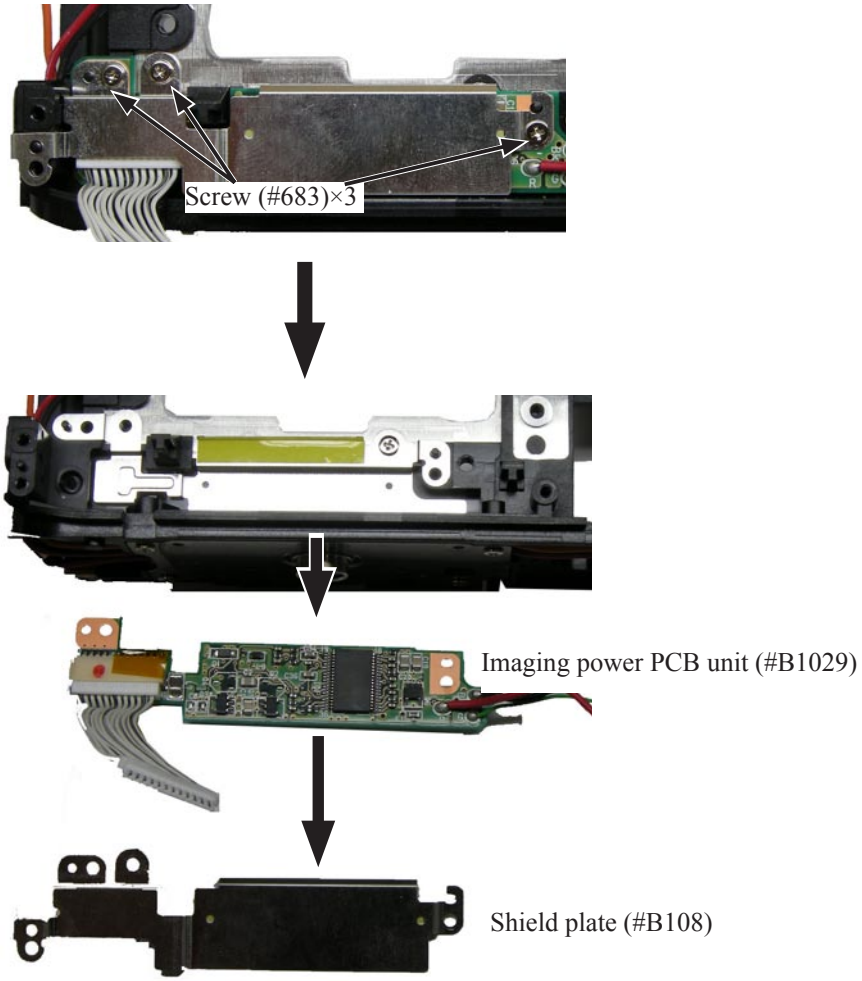

・Take out the screw (#683).

・Remove the GND plate unit (#B141).

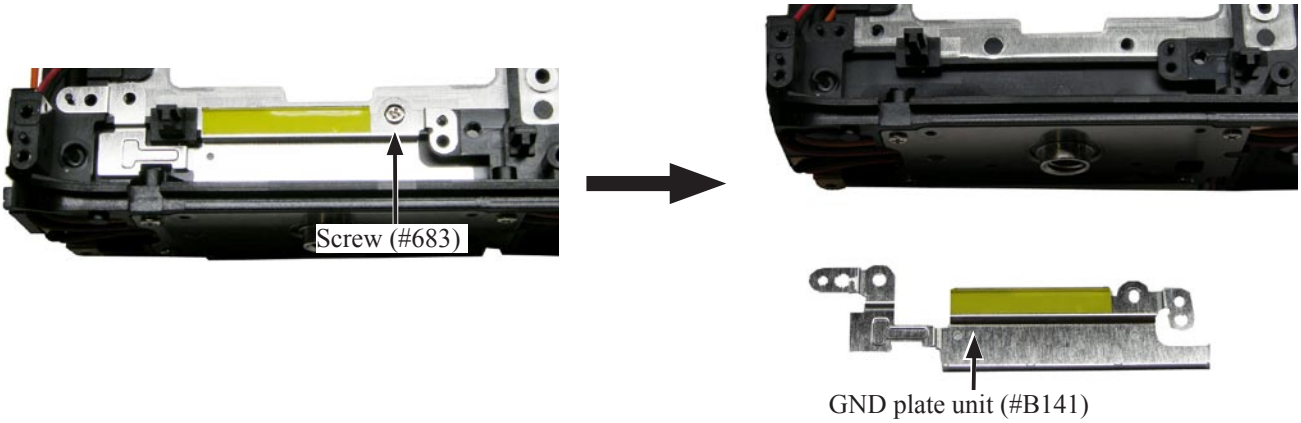

Bottom plate unit

・Take out the screws (#706).

・Unhook the GND plate (#140) from the rear body , and remove the bottom plate unit (#B67) from the rear body .

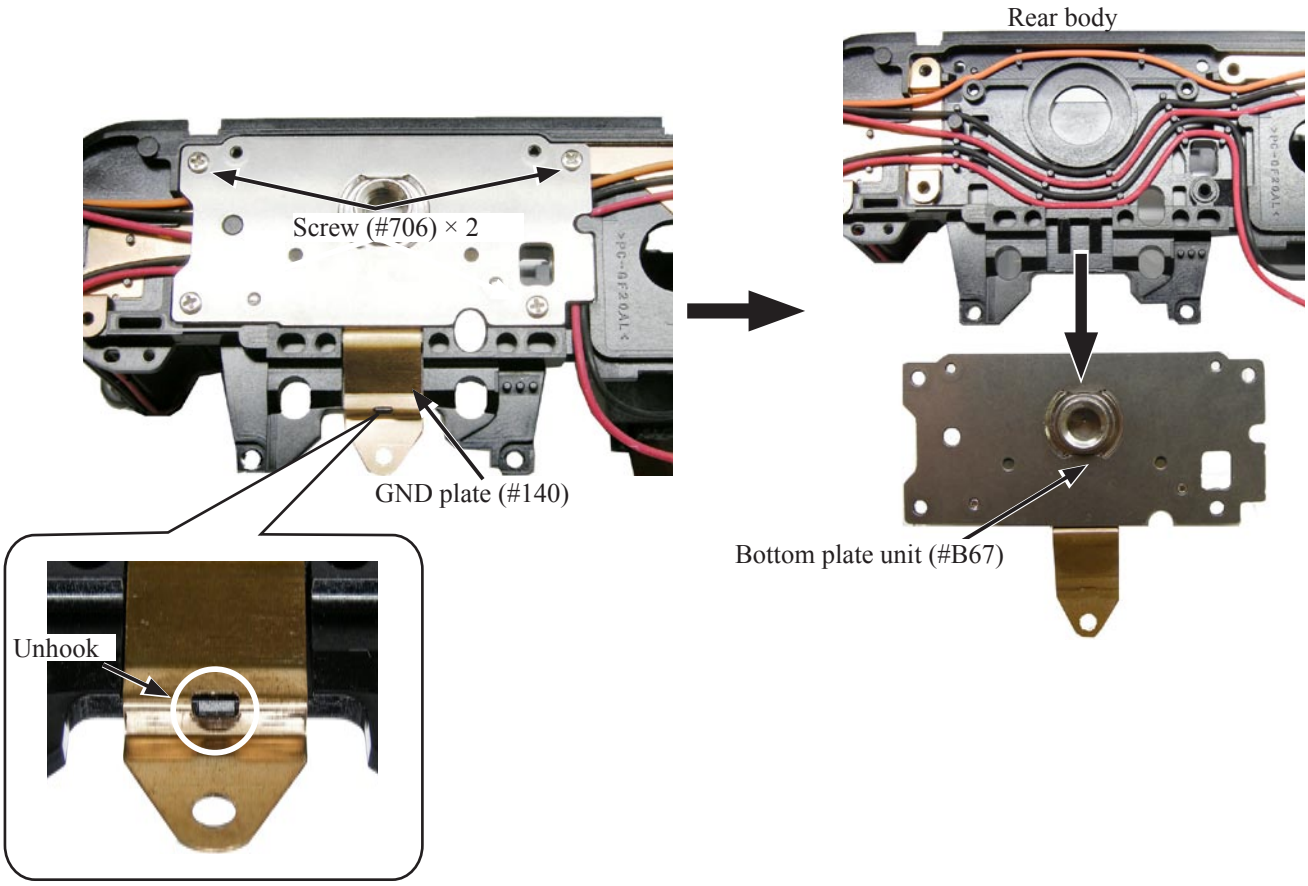

・Take out the two screws (#617).

・Remove the bottom plate unit (#B67).

・Remove the GND plate (#140).

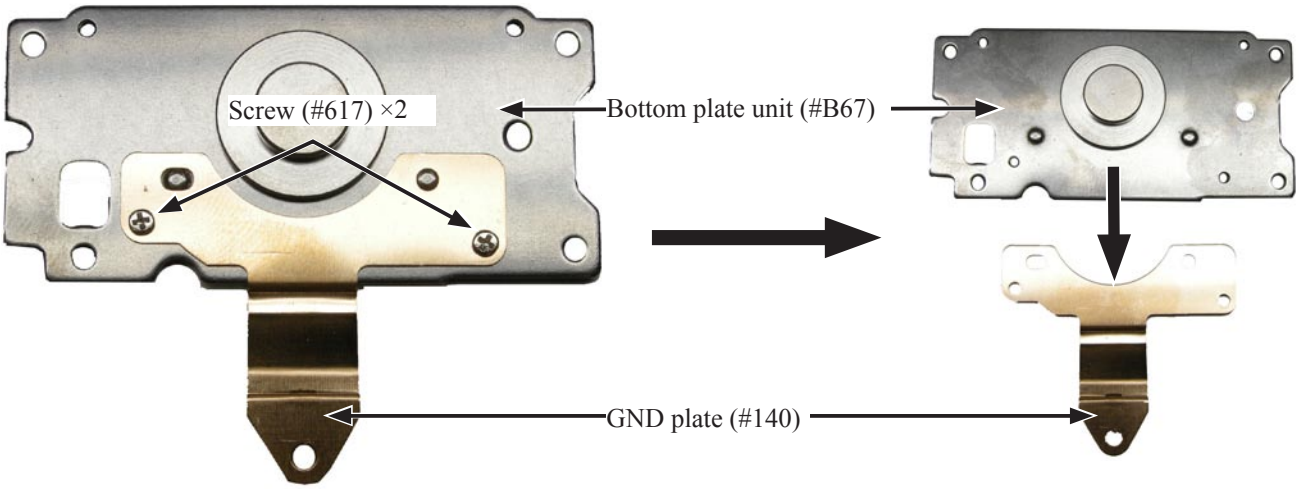

Power drive PCB unit

・Take out the three screws (ROHS) (#609).

・Remove the OP-FPC unit (#B1016).

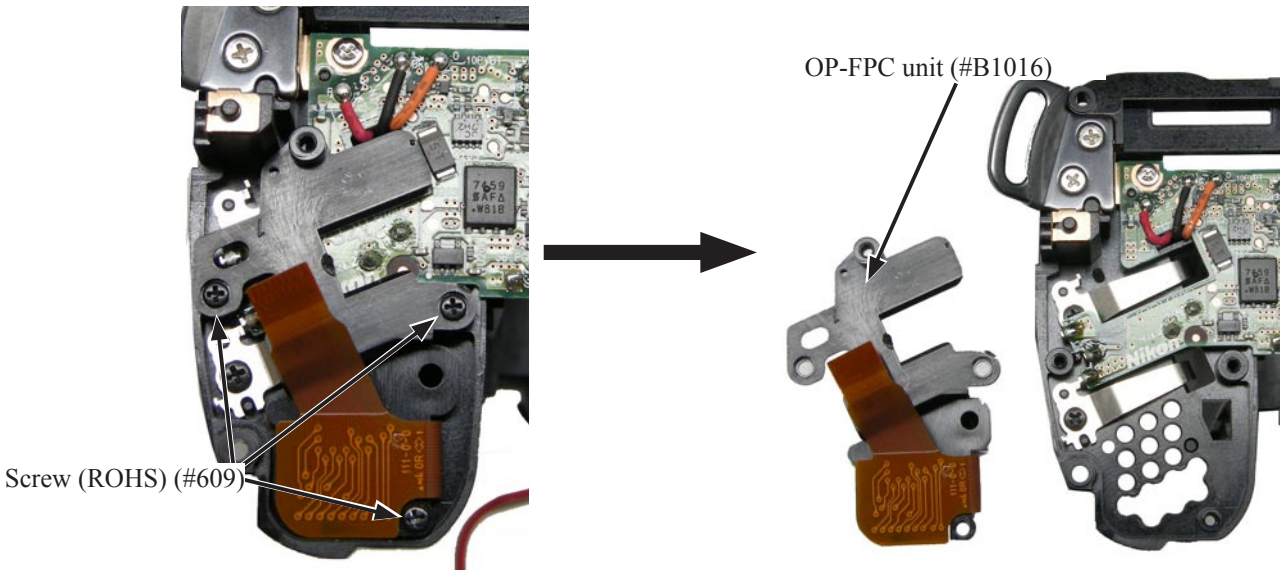

・Unsolder the wires (red/black/orange).

・Remove the three solder bridges.

・Take out the two screws (#683).

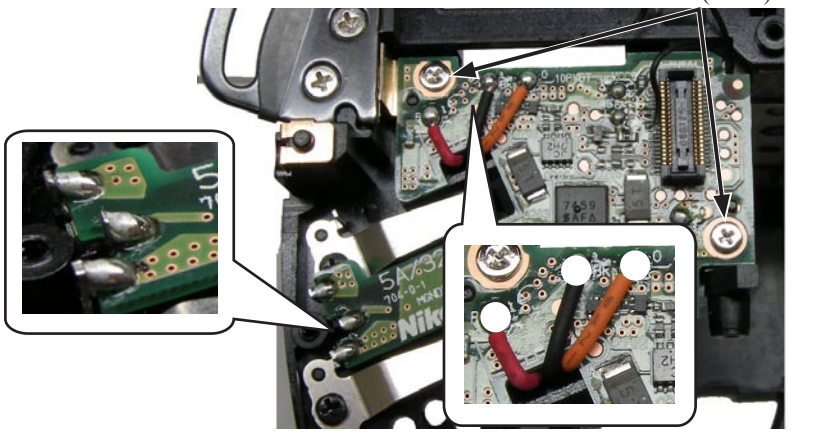

・Remove the power drive PCB (#B1002).

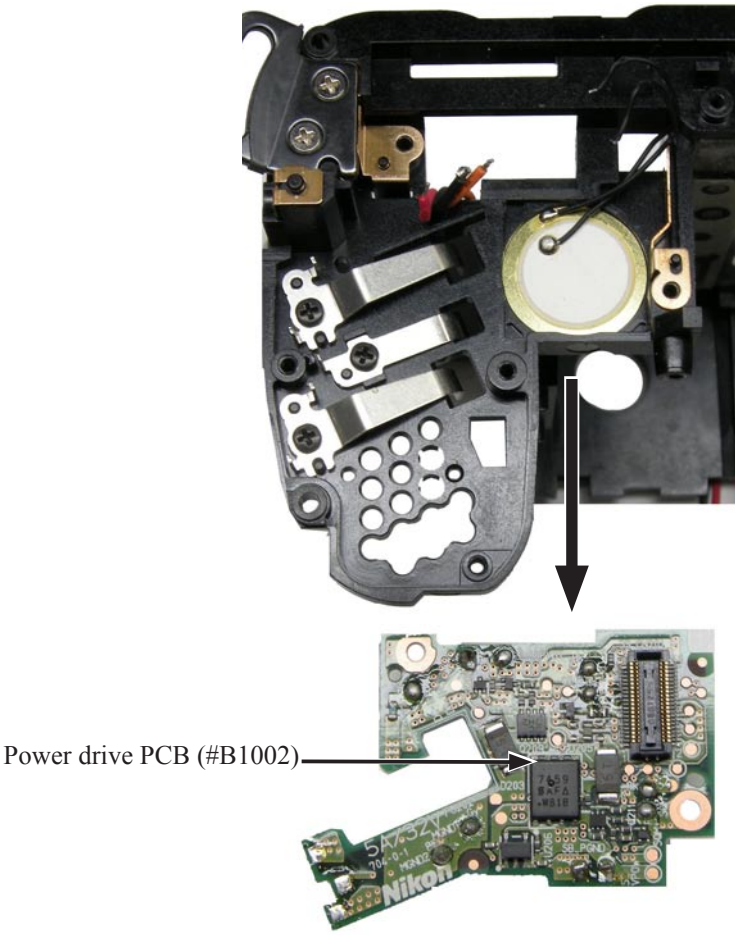

・Remove the GND plate (#142).

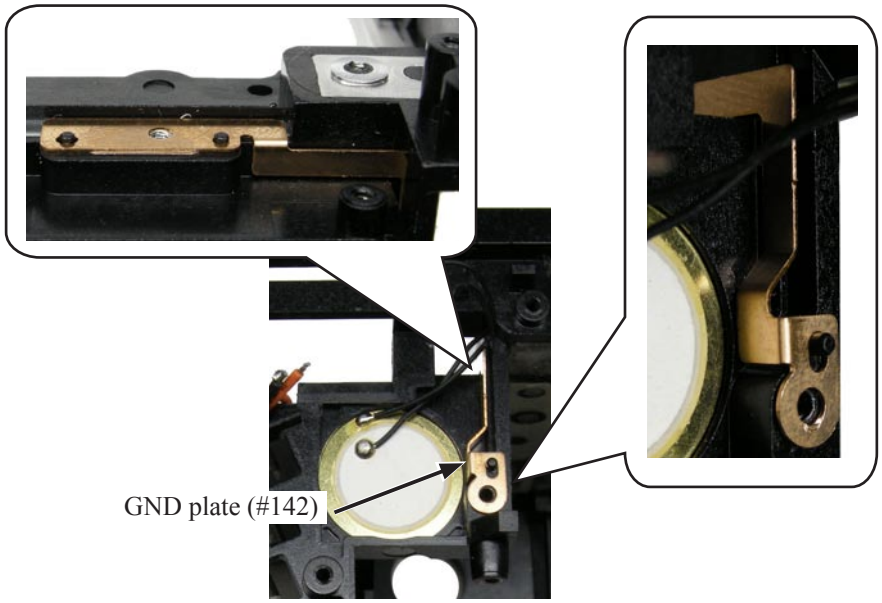

Battery contact-spring

・Take out the three screws (#619).

・Remove the FG/ID contact-spring (#80) and the two battery contact-springs (#157).

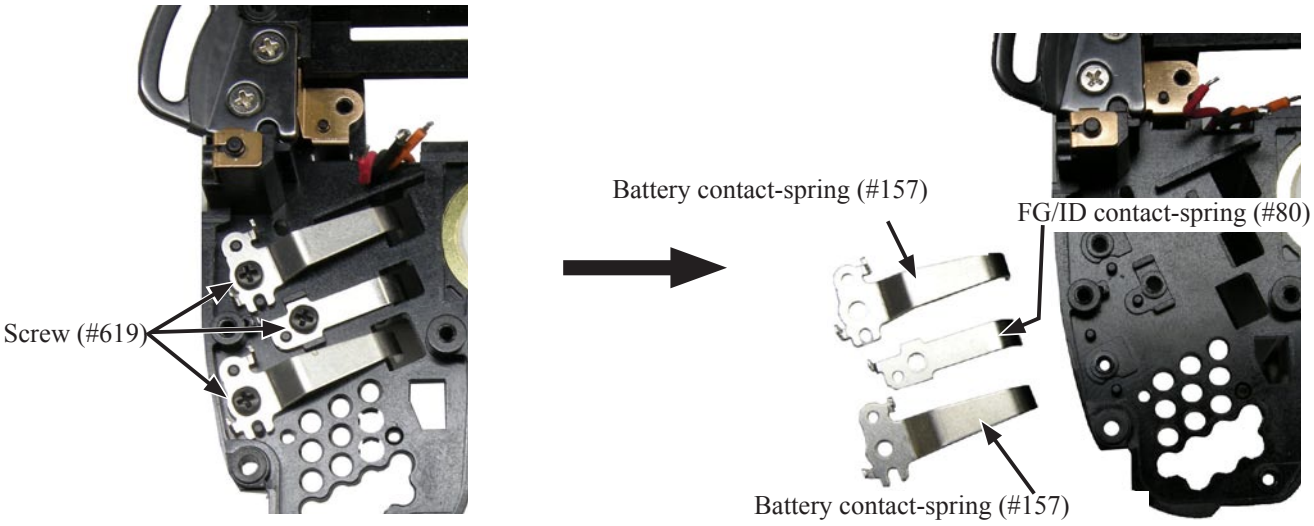

・Remove the (back-side) wires (Orange/Black/Red).

・Remove the (Bayonet-side) wires (Red/Black).

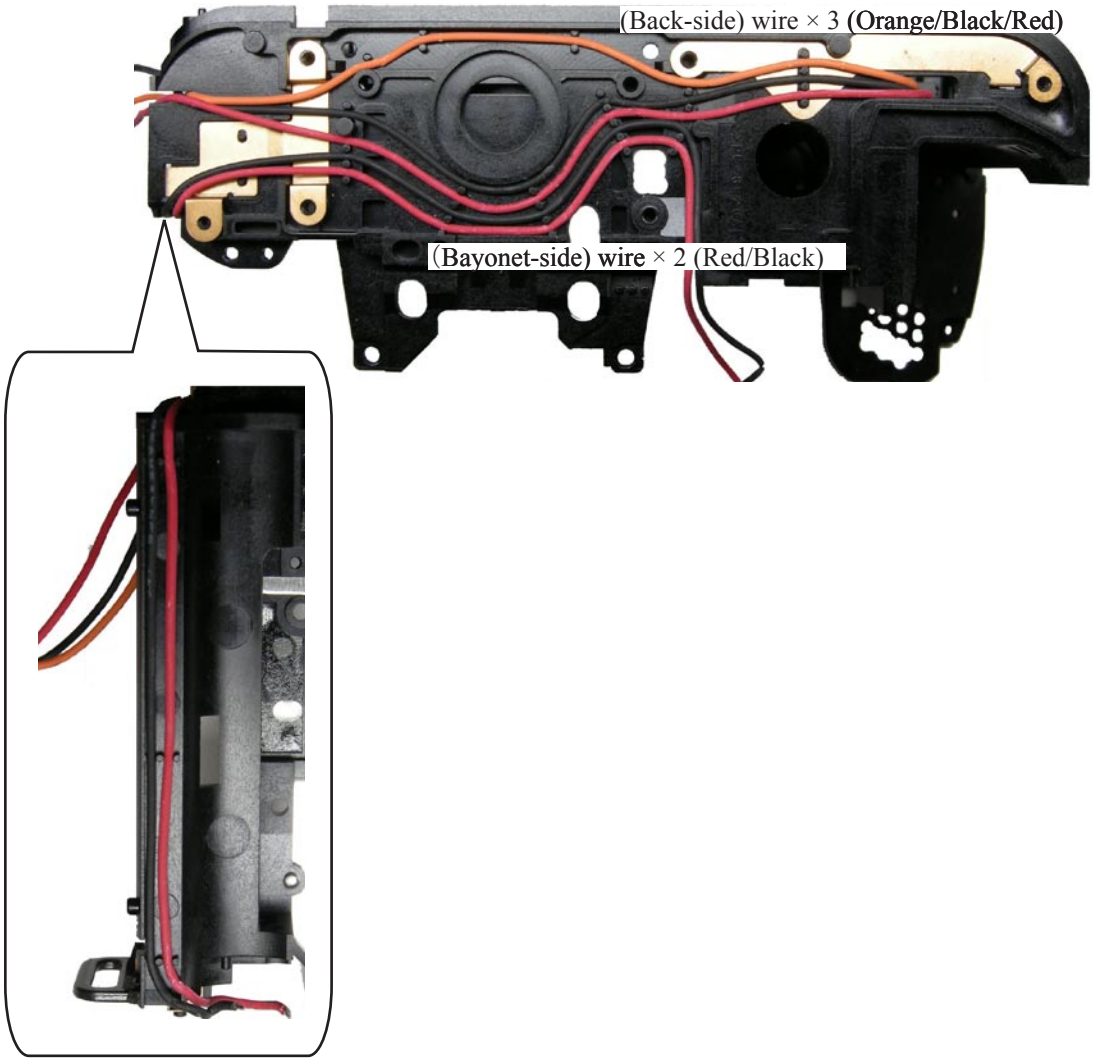

・Remove the GND plate (#143).

・Remove the GND plate (#107).

・Remove the wires (Orange/Black/Red).

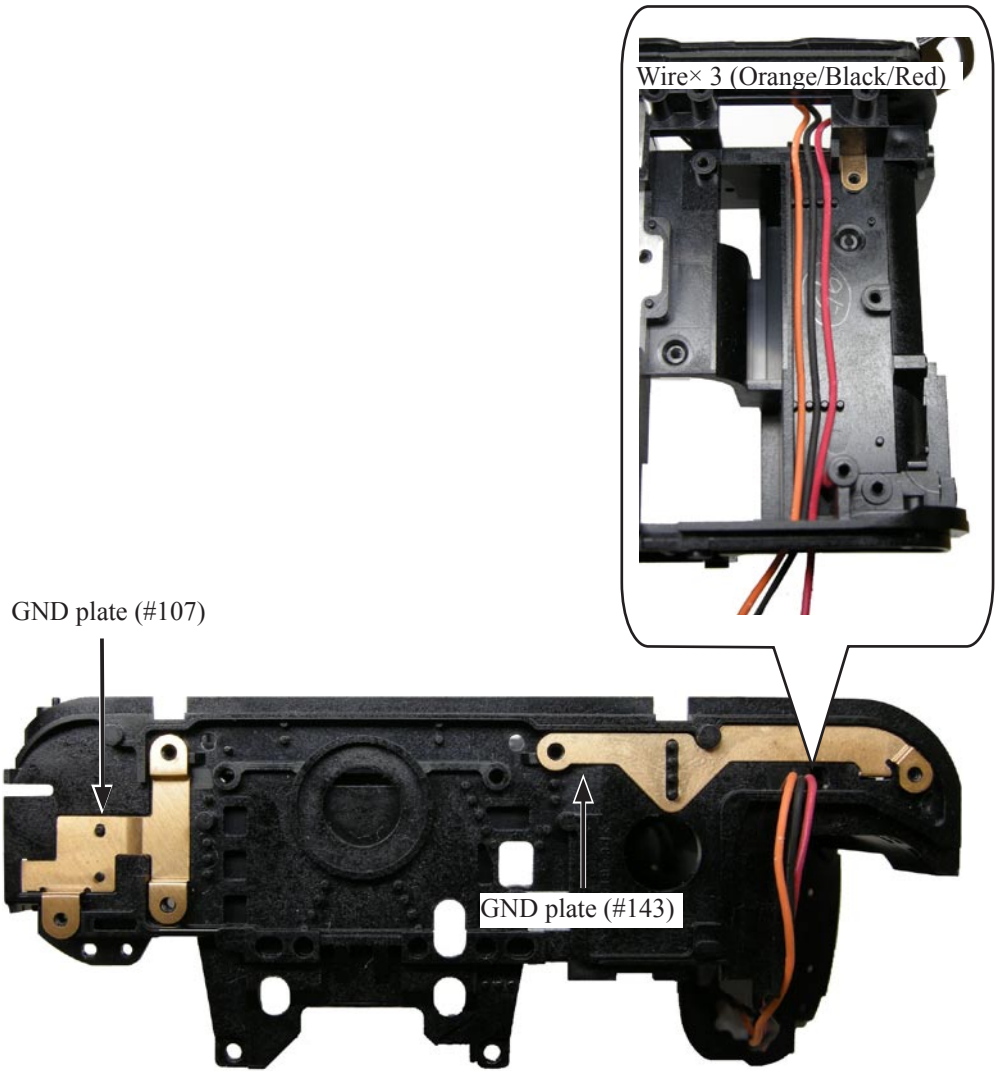

Eyelet

・Take out the two screws (#614).

・Remove the eyelet (#145) and the GND plate (#149).

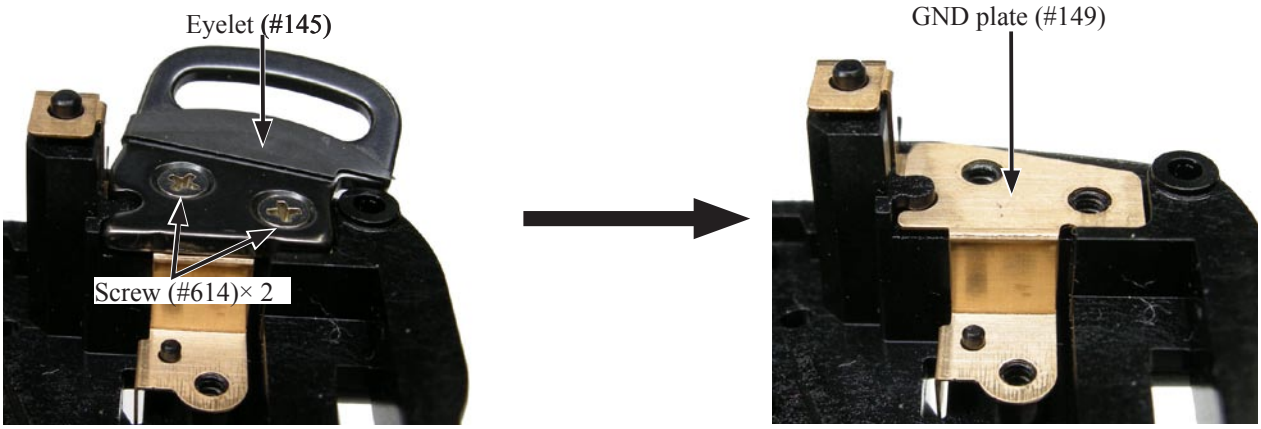

・Take out the two screws (#614).

・Remove the eyelet (#146).

・Peel off the sponges (#760 and #763).

・Remove the GND plate (#150).

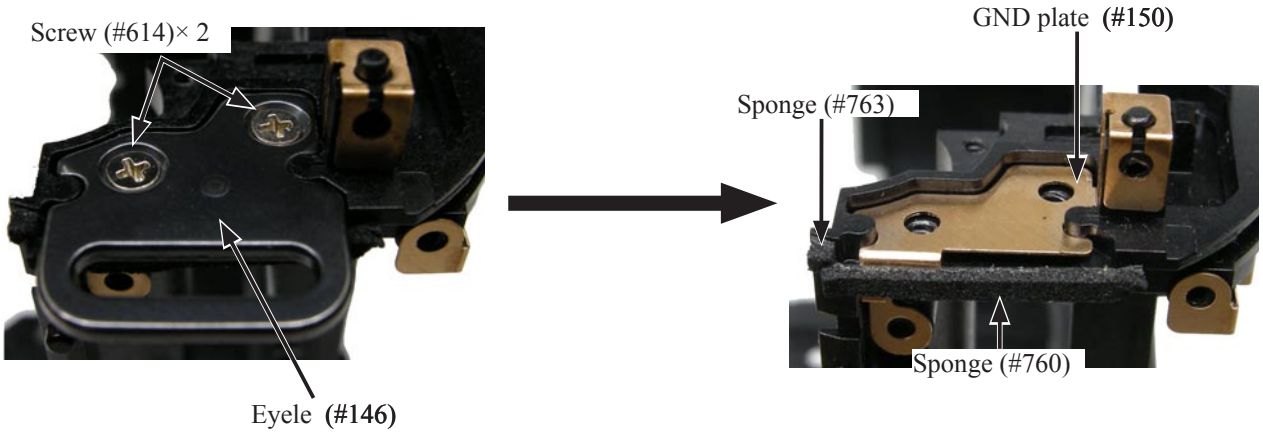

・Take out the screw (#683).

・Remove the GND plate (#106).

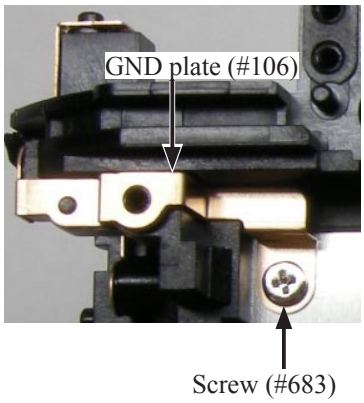

・Peel off the sponge (#762) from the eyelet (#145).

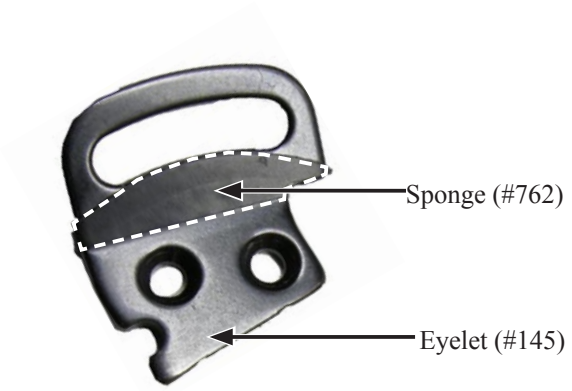

Buzzer unit

・Remove the buzzer unit (#1055).

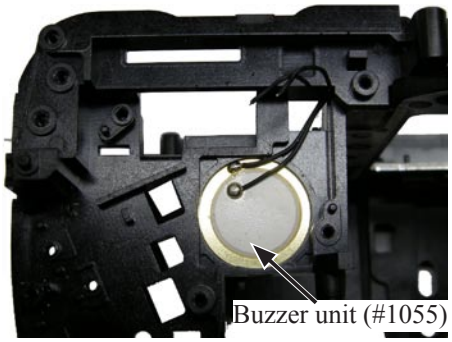

Drip-proof sponge

・Peel off the two sponges (#753).
・Peel off the sponge (#766).
・Peel off the sponge (#761).

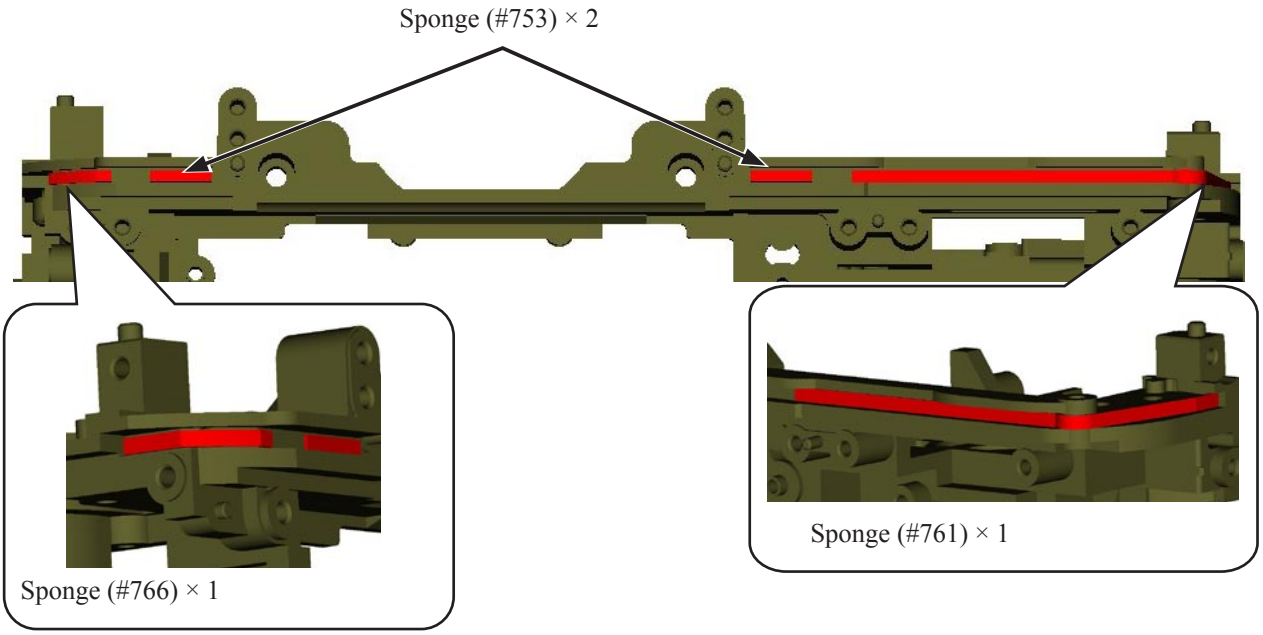

・Peel off the sponge (#751).

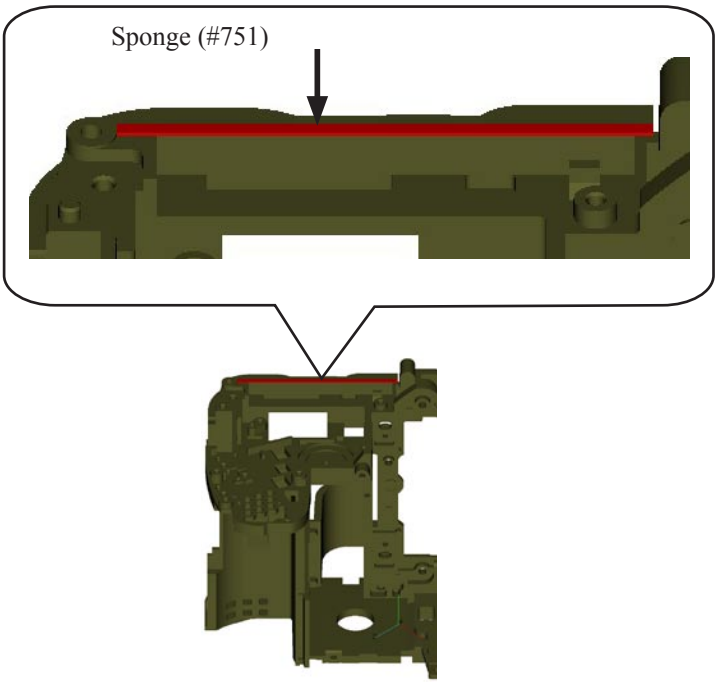

Dust-proof tape

・Peel off each tapes [TA0026 (8×50), #733 and #734].

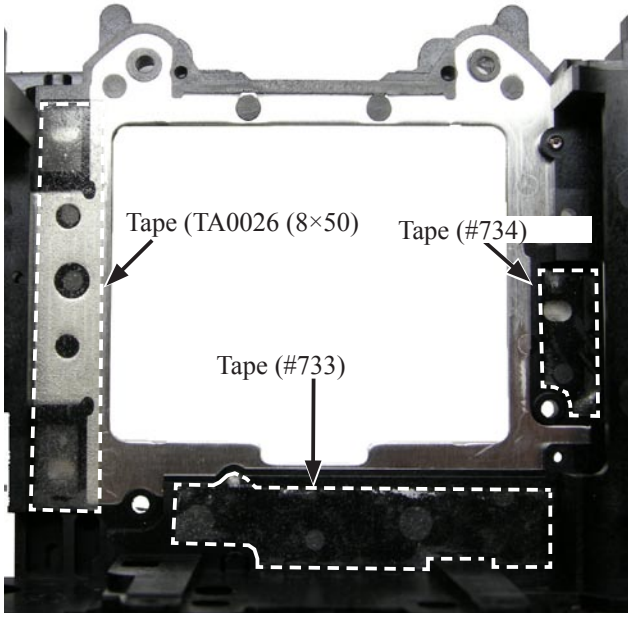

6. Separation of Prism box unit from Front body unit

・Take out the four screws from the P-box unit.

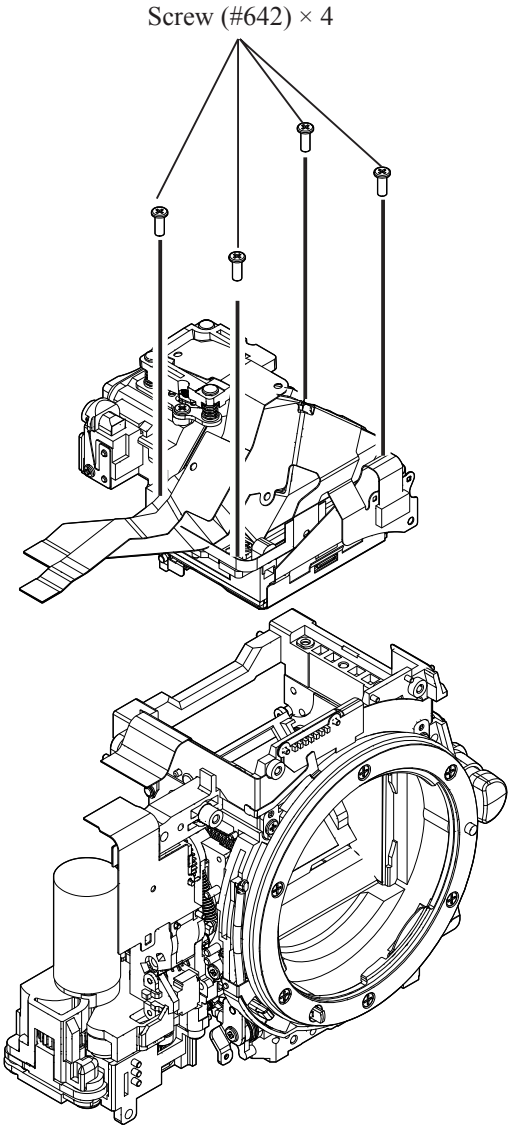

7. Prism box unit

Metering FPC unit

・Take out the three screws (#607), and remove the metering FPC unit (#B11008).

Inside finder LCD unit

・Disconnect the FPC of the inside finder LCD unit (#B1010) from the connector on the penta prism FPC unit (#B1021).

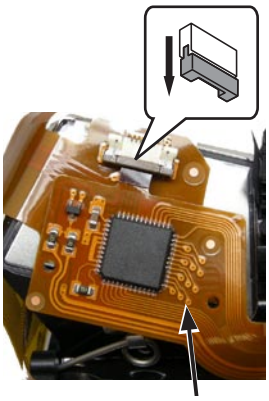

・Take out the two screws (#708), and remove the inside finder LCD unit (#B1010).

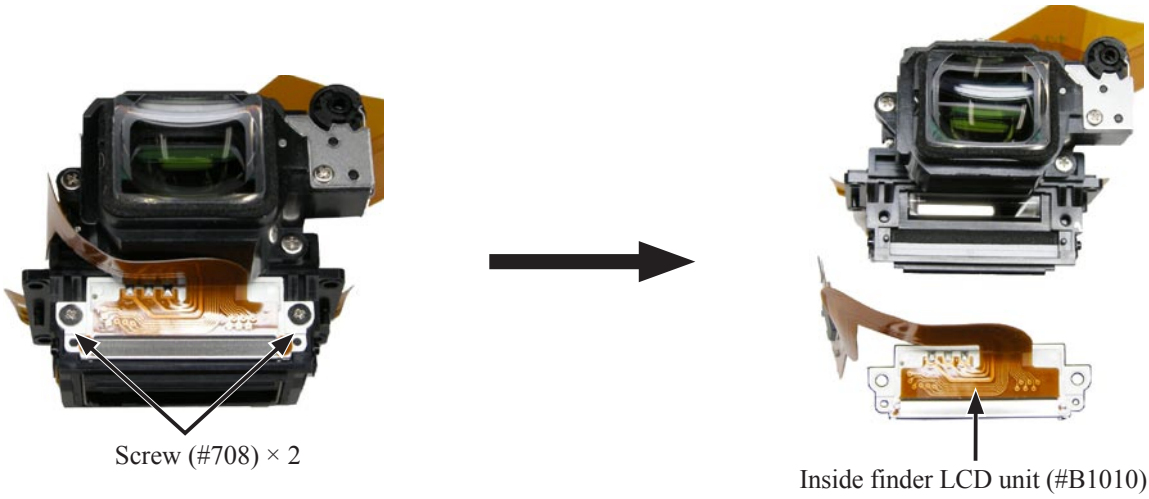

Screen box

- Peel off the tape [TA0009 (7×5)].
- Disconnect the FPC of the SI unit (#B1046) from the connector on the penta prism FPC unit (#B1021).

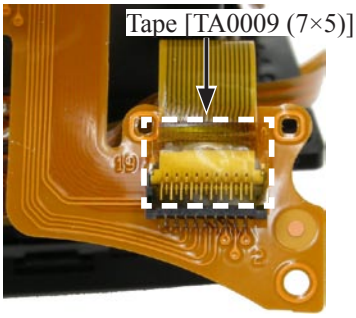

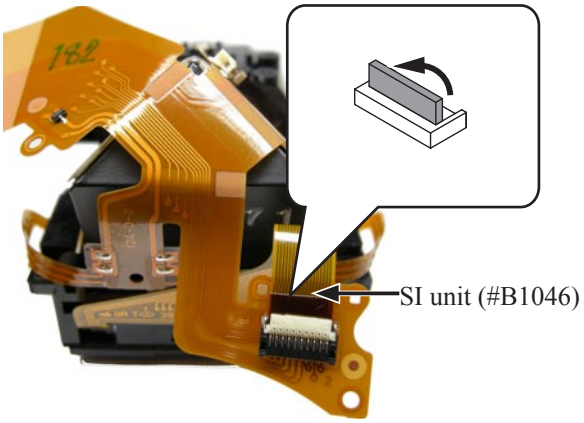

- Remove the screen box plate (#511) by unhooking from the penta prism box unit (#261) and releasing from the side bosses.

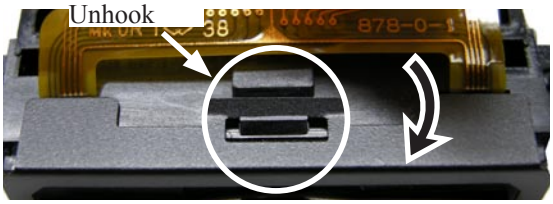

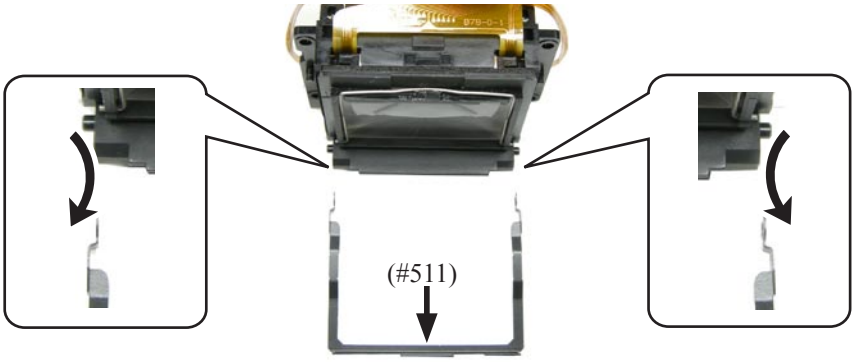

- Remove the screen box assembly.

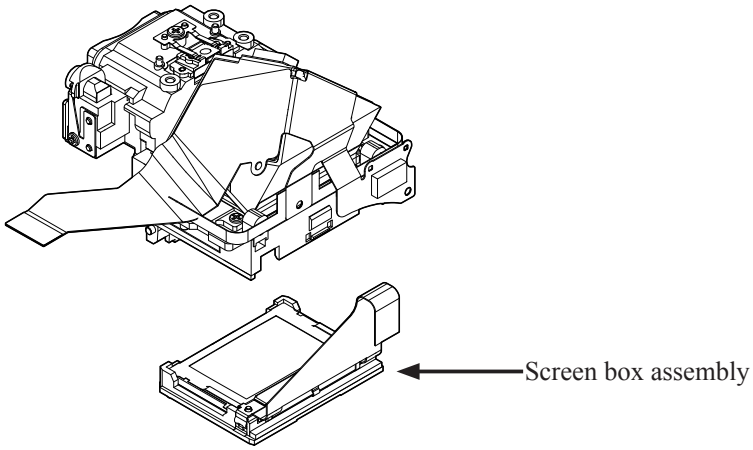

・Unhook the spring (#265) from the screen box (#510), and remove the fresnel lens (#3) and sponge (#527).

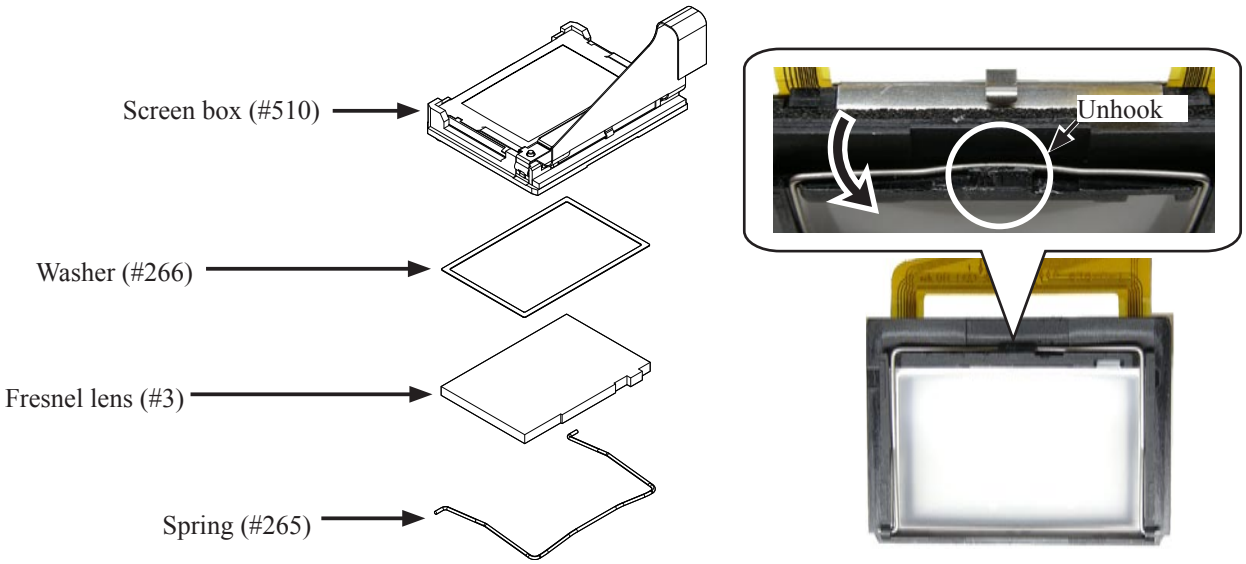

・Unhook the retainer spring (#534) from the screen box (#510), and remove the view field frame 1 (#263) and the SI unit (#B1046).

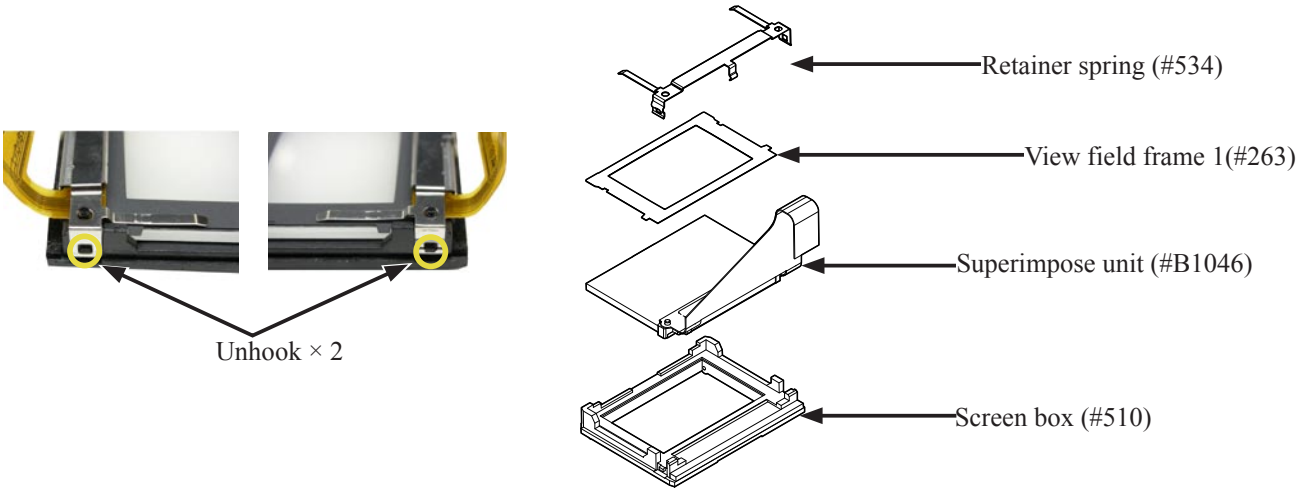

Penta prism

・Peel off the upper part of the penta prism FPC unit (#B1021) from the penta prism as below.

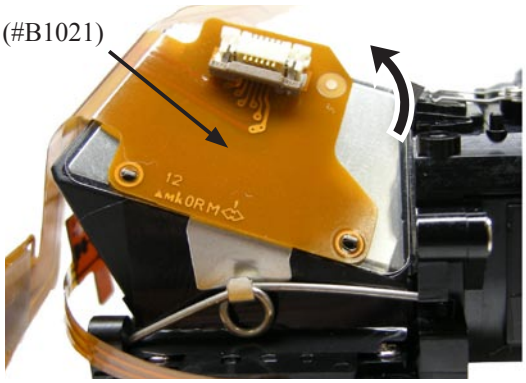

・Peel off the dust-prevent sheet (#298).

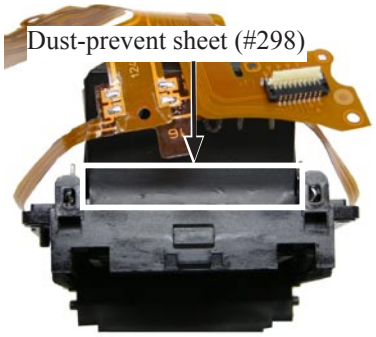

・Remove the two springs (#268).

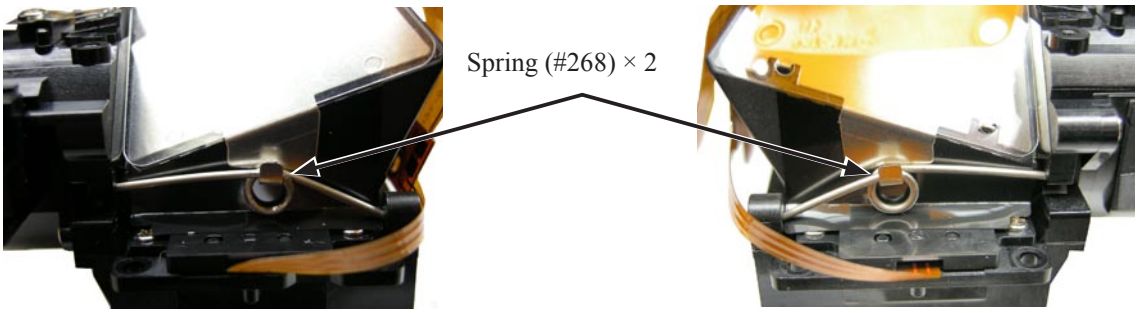

・Peel off the double-stick tape (#781).

・Remove the insulation sheet (#270).

・Peel off the double-stick tape (#780).

・Remove the penta prism retainer (#267) and the protection sheet (#269).

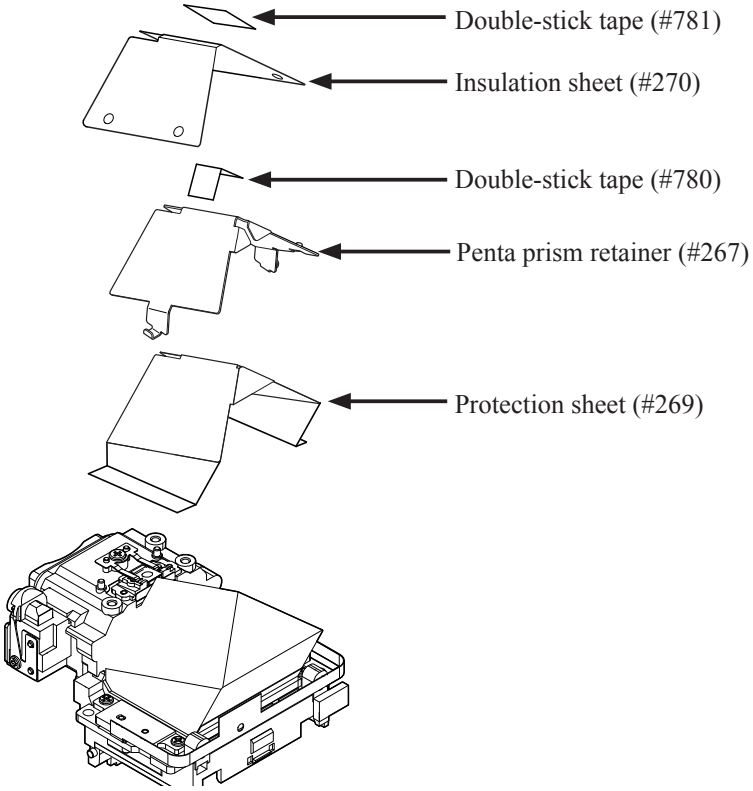

・Remove the penta prism (#4) and the view field frame 2 (#264).

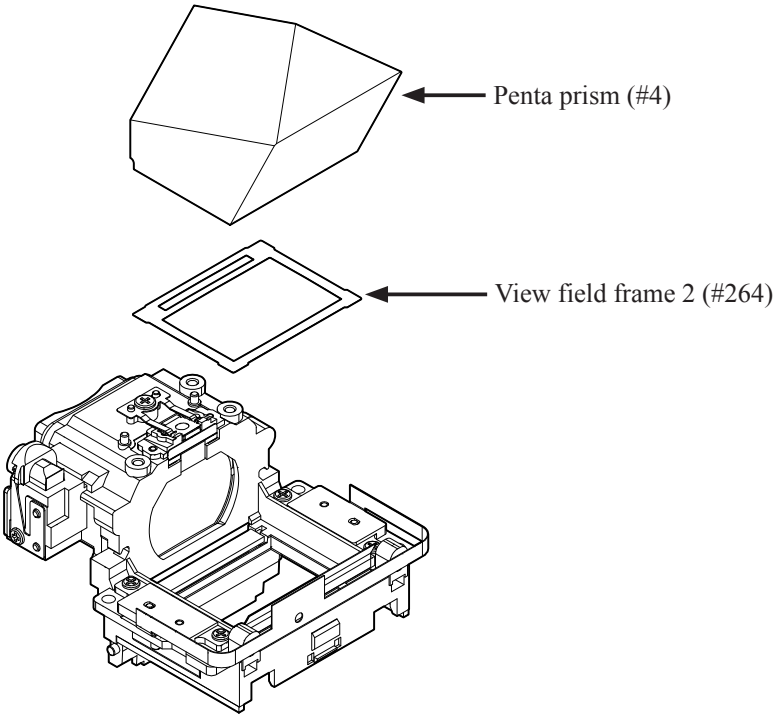

・Remove the spacer (#535).

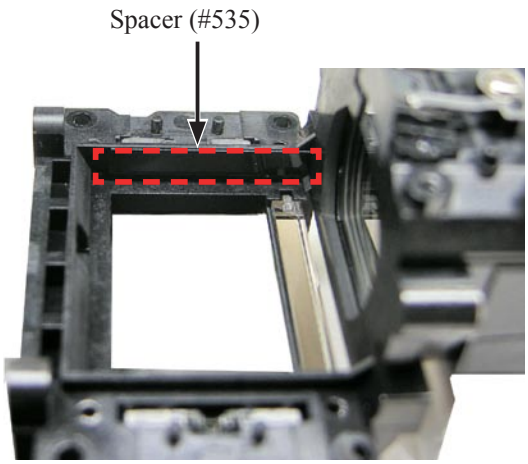

Penta prism FPC unit

・Take out the four screws (#635).

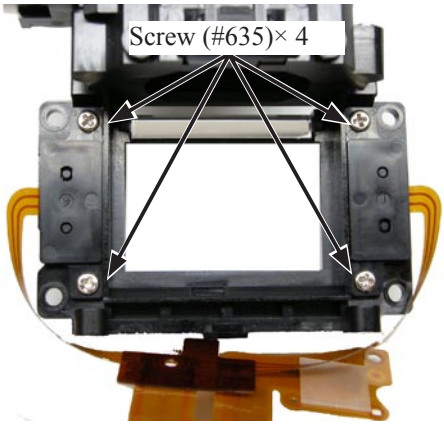

・Remove the two plates (#532) and the penta prism FPC unit (#B1021).

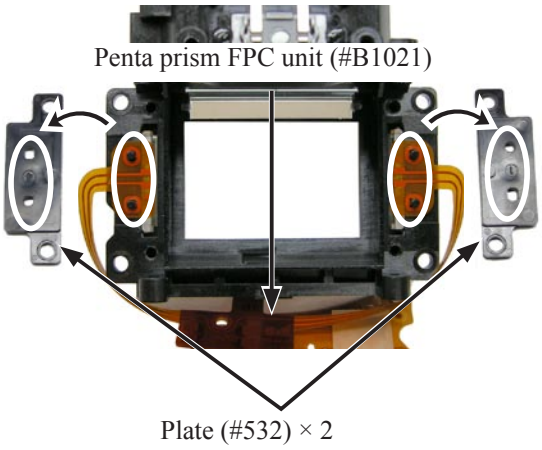

- Peel off the tape (#521).
- Remove the light guide (#503).
- Remove the double-stick tape (#504) from the light guide (#503).
- Remove the polarizer plate (#502).

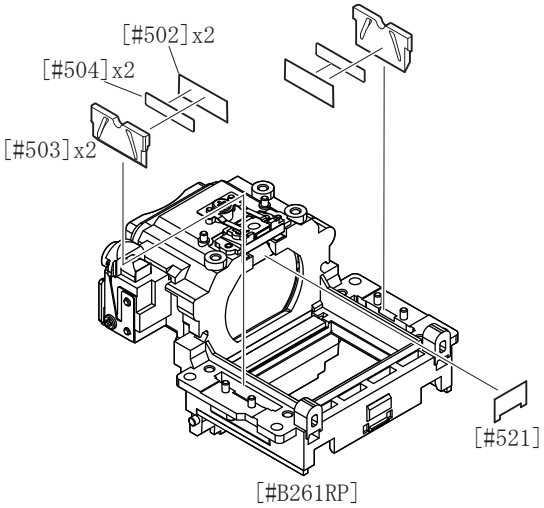

Eyepiece barrel unit

- Peel off the tape (#783).
- Take out the two screws (#642).
- Remove the eyepiece barrel unit (#B271) from the penta prism box unit (#B261RP).
- Remove the eyepiece lens 1 (#5) and eyepiece lens 3 (#7).

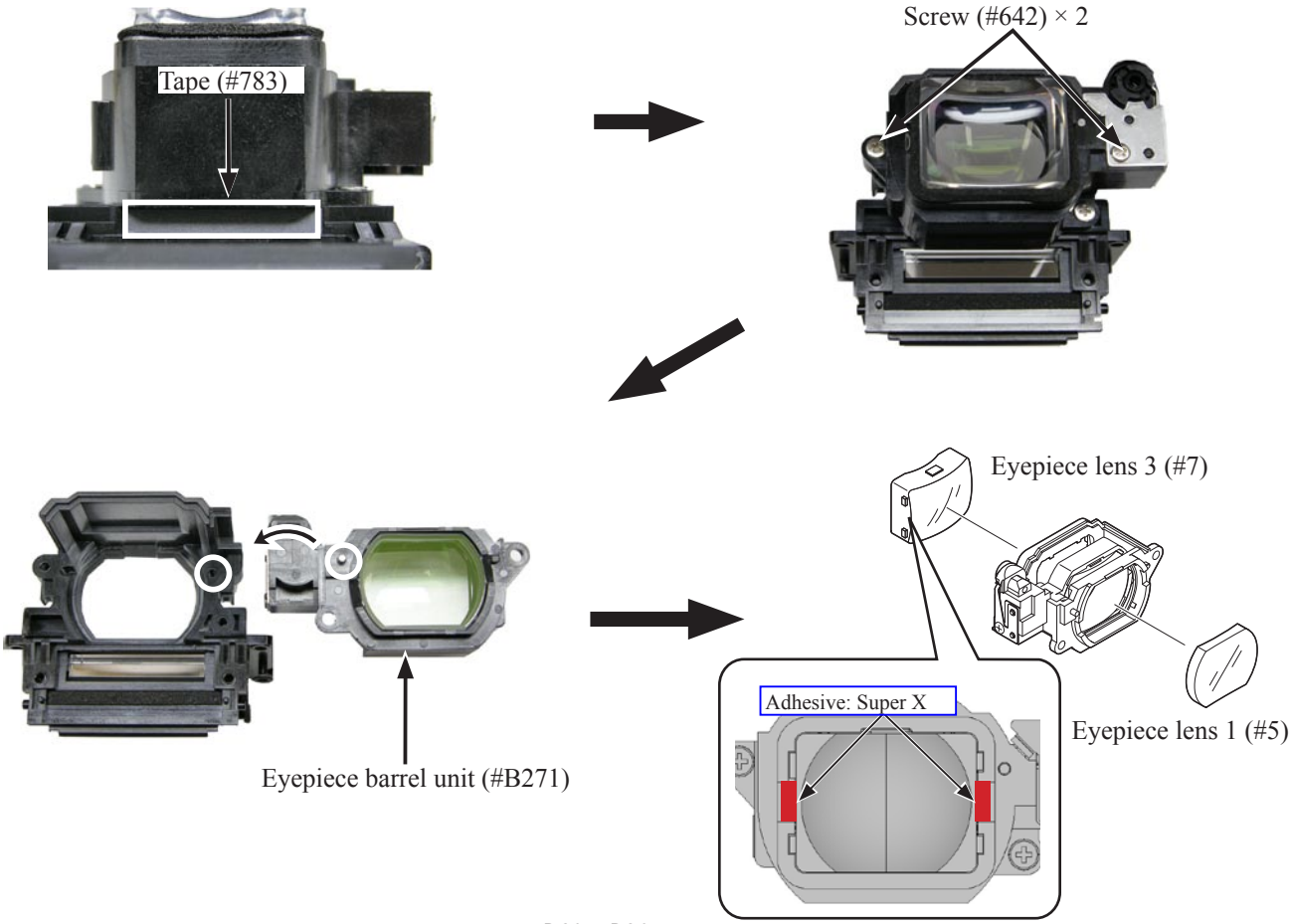

8. Front body unit

SB PCB

・Disconnect the FPC of the aperture control unit (#B241RP) from the connector.

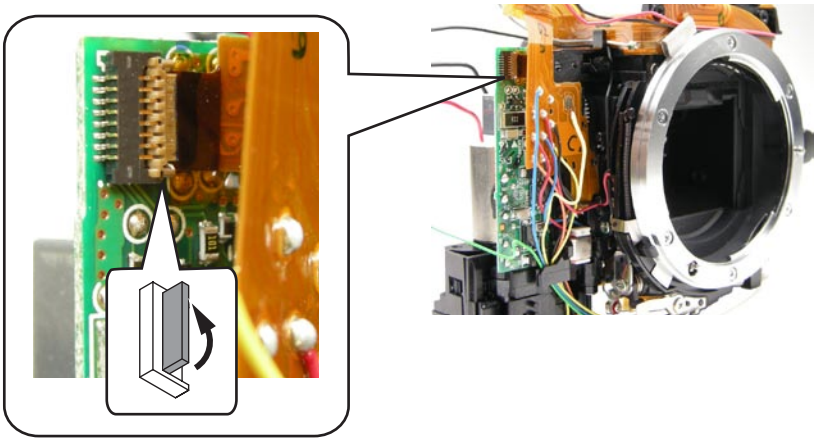

・Take out the screw (#683).

・Remove the SB PCB (#B1040).

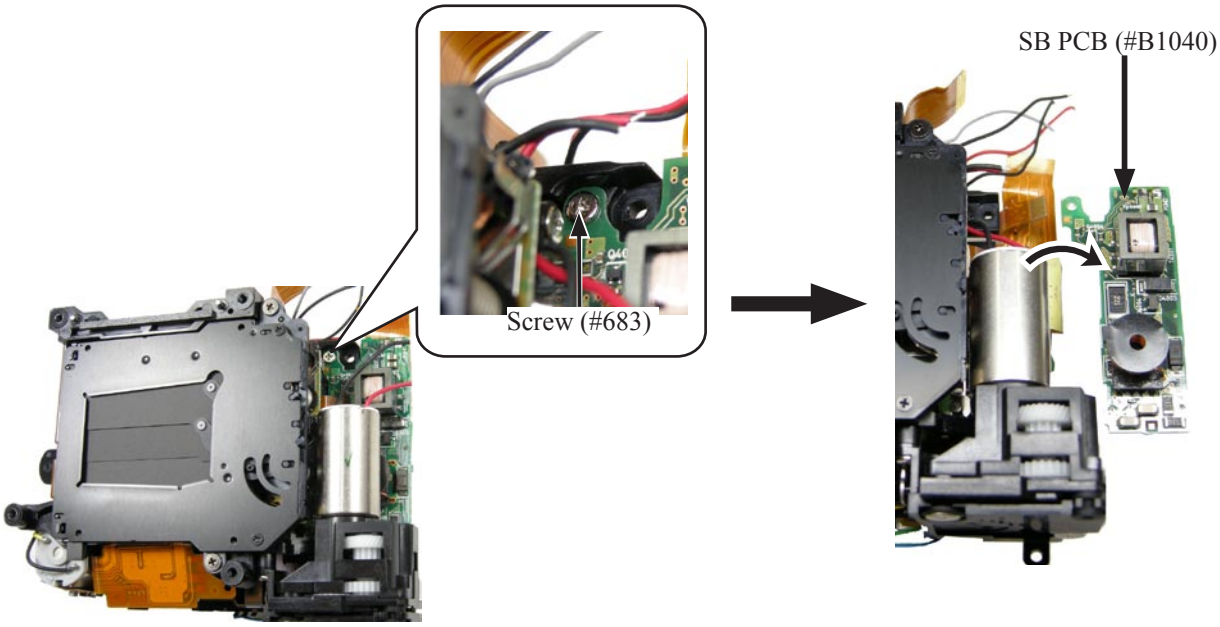

・Peel of the tape [#TA0009 (5×7)].

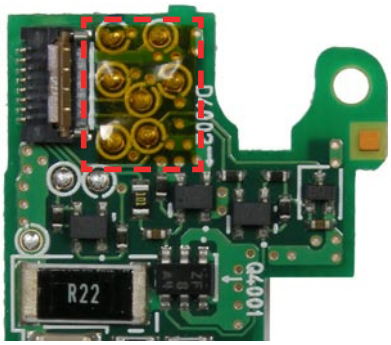

Shutter unit

・Peel off the tape (#778), and remove the solder bridge.

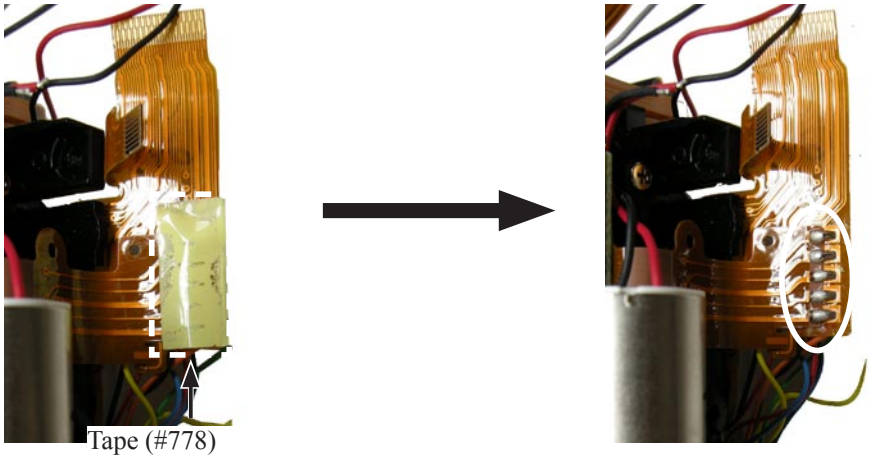

・Turn the gear of the aperture control unit (B241RP) in the direction of the arrow, and raise the mirror.

・Take out the two screws (#638), and remove the shutter unit (#B31).

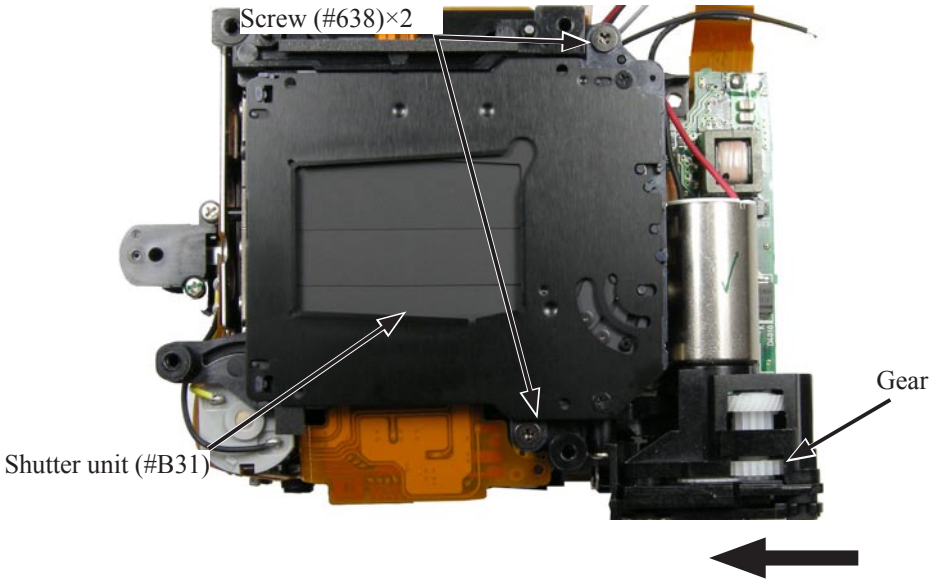

AF CCD unit

・Disconnect the FPC of the AF CCD unit (#B2163) from the connector.

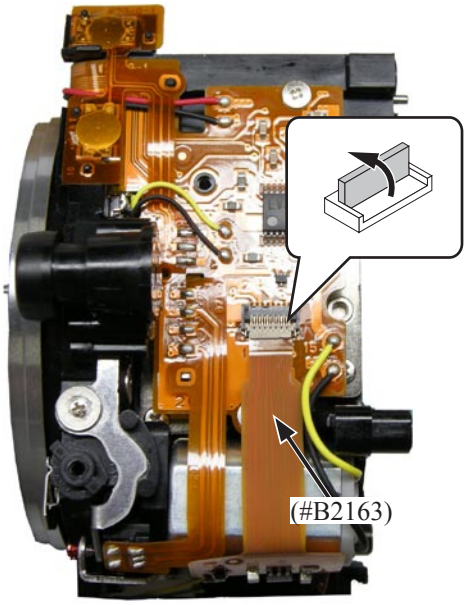

・Take out the three screws (#173) with a hexagonal wrench (φ1.5mm).

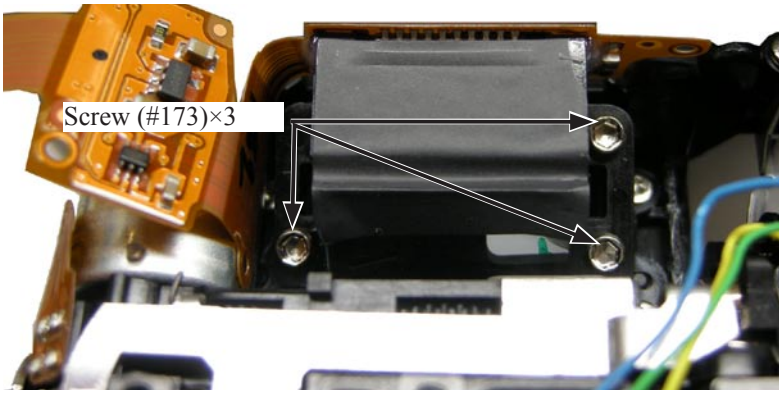

・Remove the AF CCD unit (#B2163).

・Remove the three springs (#170).

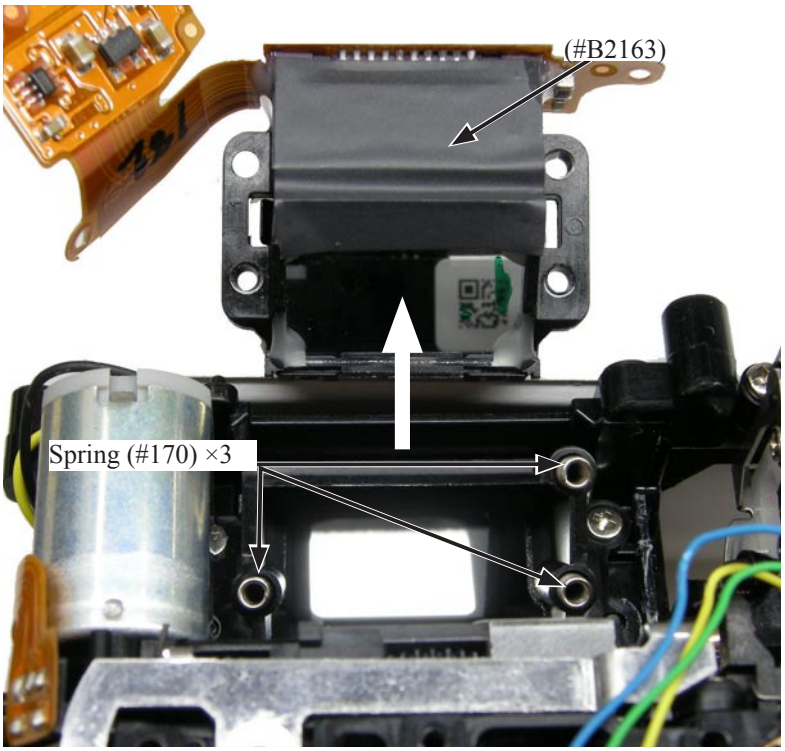

Front body FPC

・Unsolder the wires (Red/Black) of Fmin-SW.

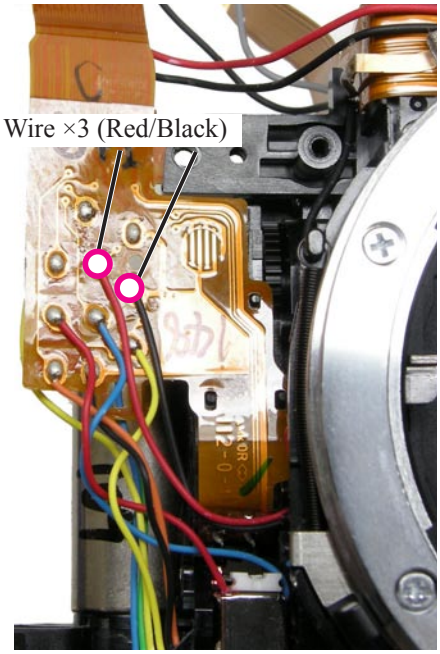

・Remove the solder bridges at three places.

・Unsolder the wires (Black/Yellow) of AM change sw.

・Unsolder the wires (Black/Yellow) of AF motor.

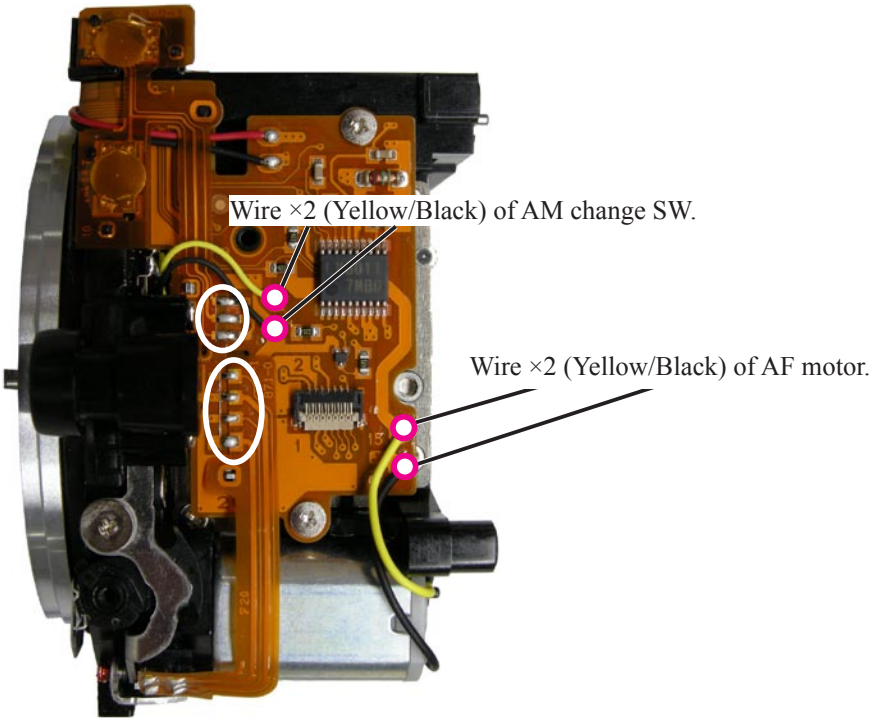

・Remove the bkt-SB FPC unit (#B1014).

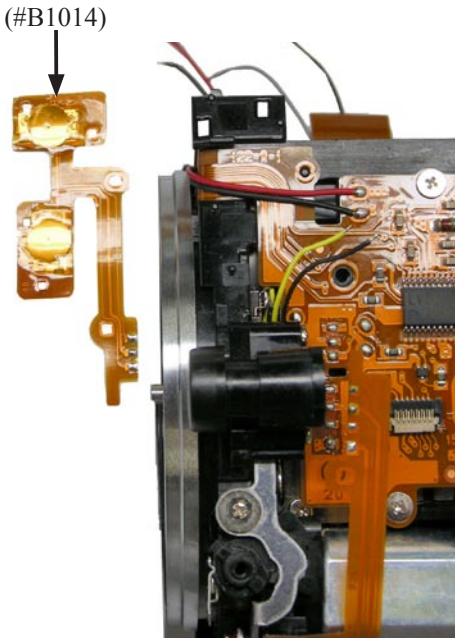

・Take out the two screws (#640)

・Take out the one screw (#670).

・By releasing from the bosses, turn up the FPC of the lens contact unit (#B2113).

・Remove the front body FPC (#B1009).

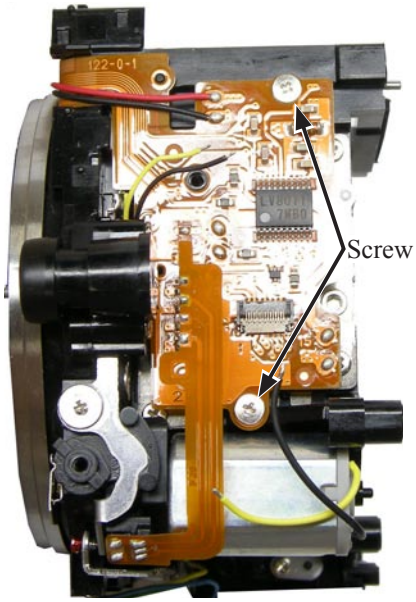

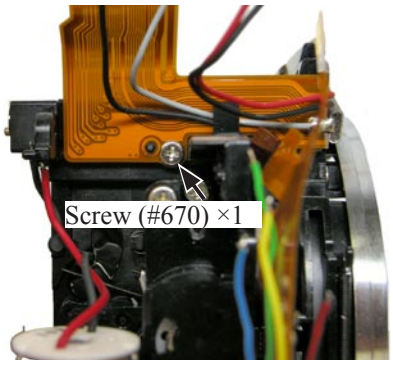

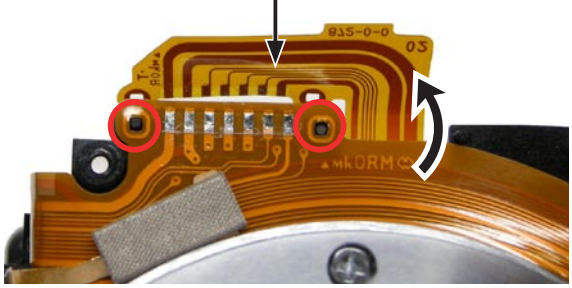

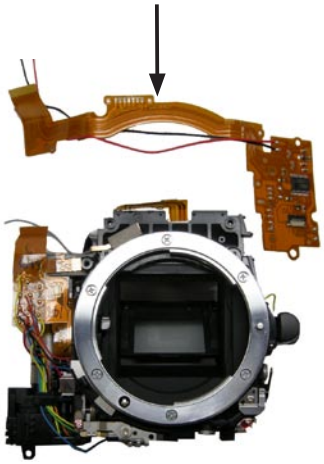

・Remove the holder (#560).

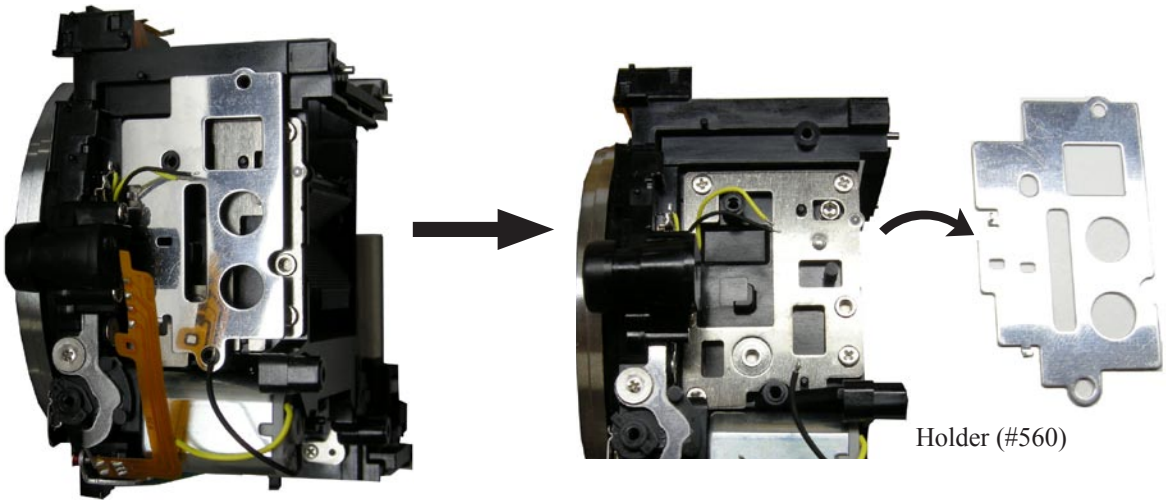

Aperture control unit

・Remove the wires (Blue/Green/Yellow) of the preview SW unit from the guides.

・Remove the wires (Blue/Green/Yellow) of the F-min SW from the guides.

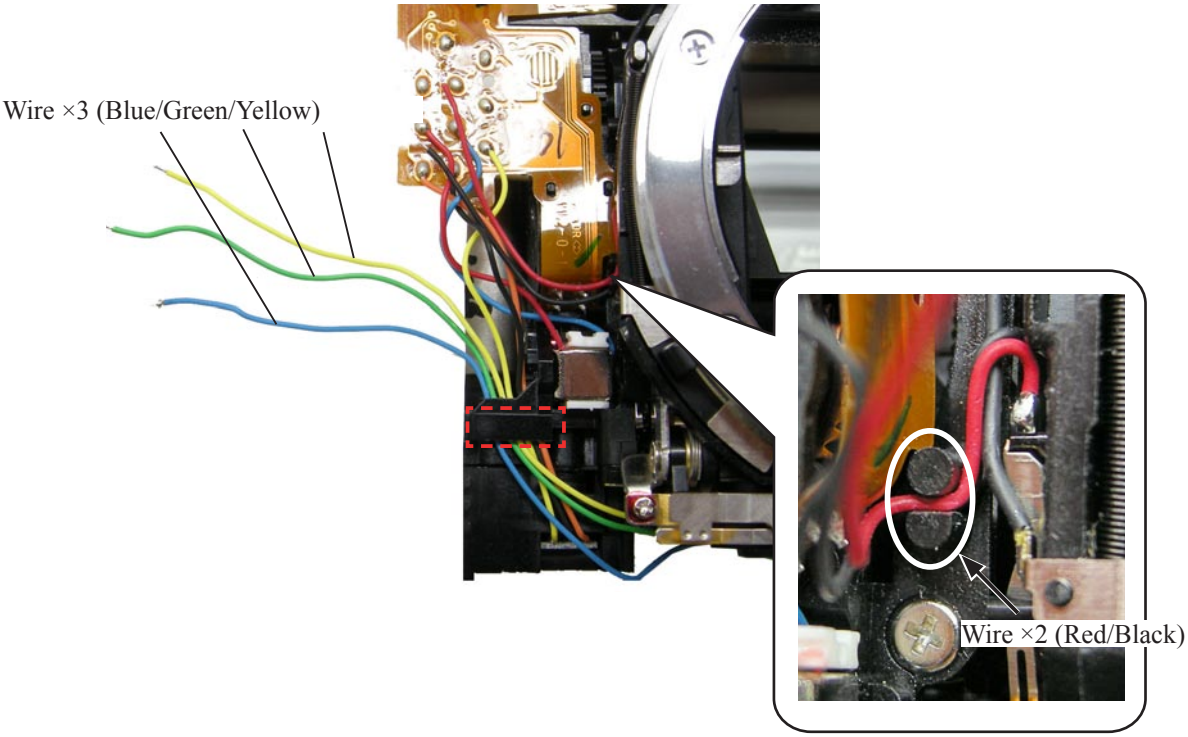

・Raise the mirror.

・Take out the two screws (#624).

・Take out the screw (#698).

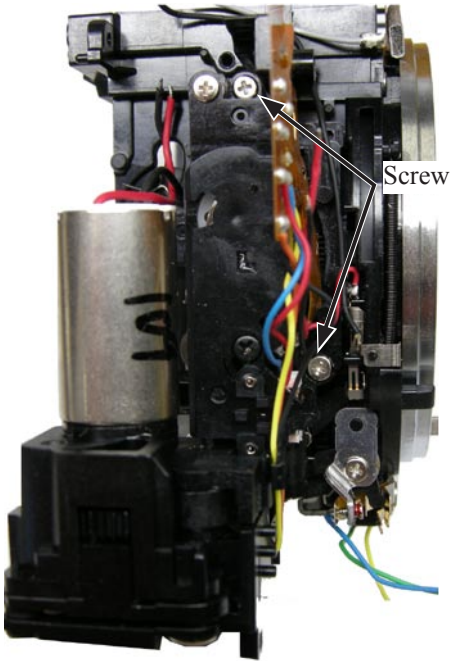

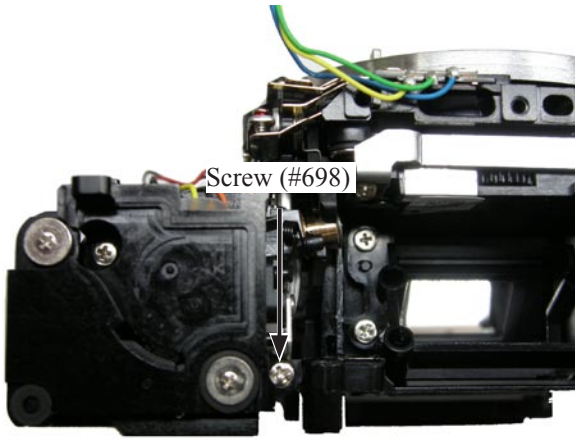

・Remove the aperture control unit (#B241RP).

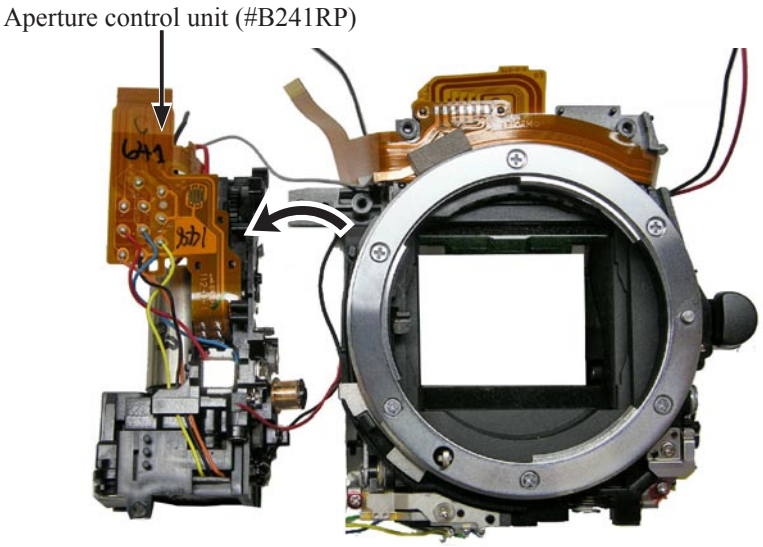

・Take out the screws (#630 and #628).

・The sequence base plate (#B91) will come off from the aperture control unit (#B241RP).

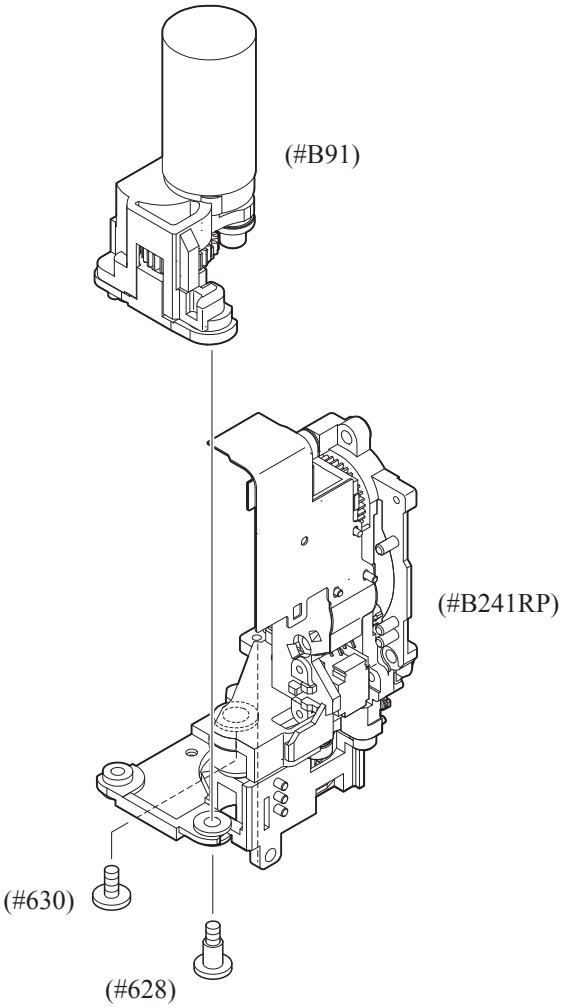

AF driving base

・Take out the screw (#630).

・Remove the lever (#193) from the groove of the coupling shaft (#185).

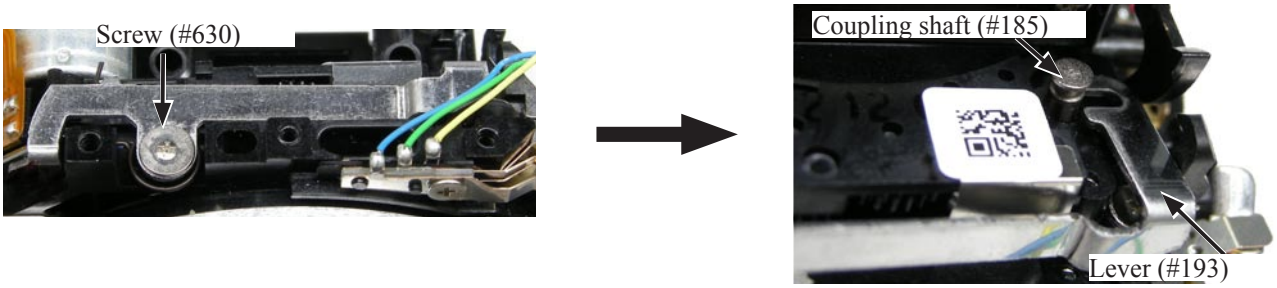

・Remove the spring (#195) (carefully to avoid popping out of the spring).

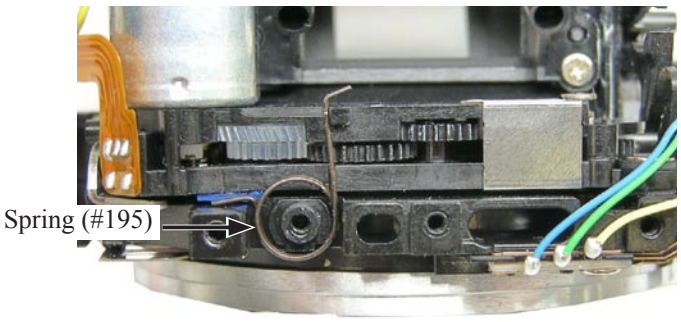

・Remove the coupling shaft (#185).

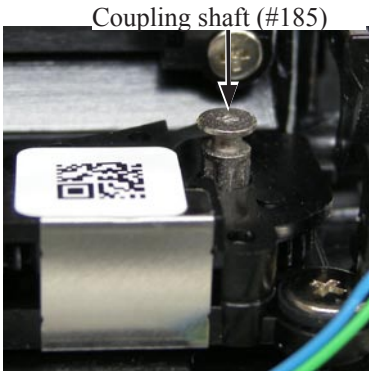

・Take out the two screws (#637).

・Remove the AF driving base (#B172).

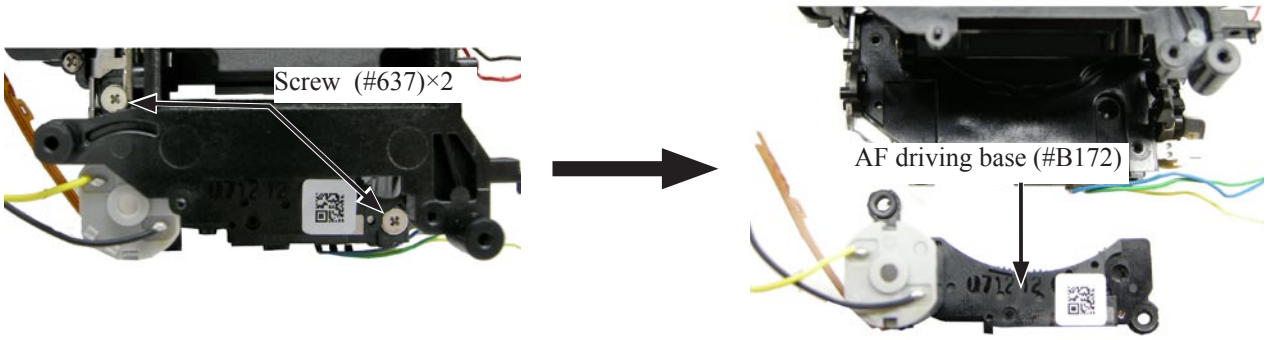

Bayonet

・Peel off the gasket (#482).

・Take out the screw (#660), and the five screws (#648), and remove the bayonet mount (#111).

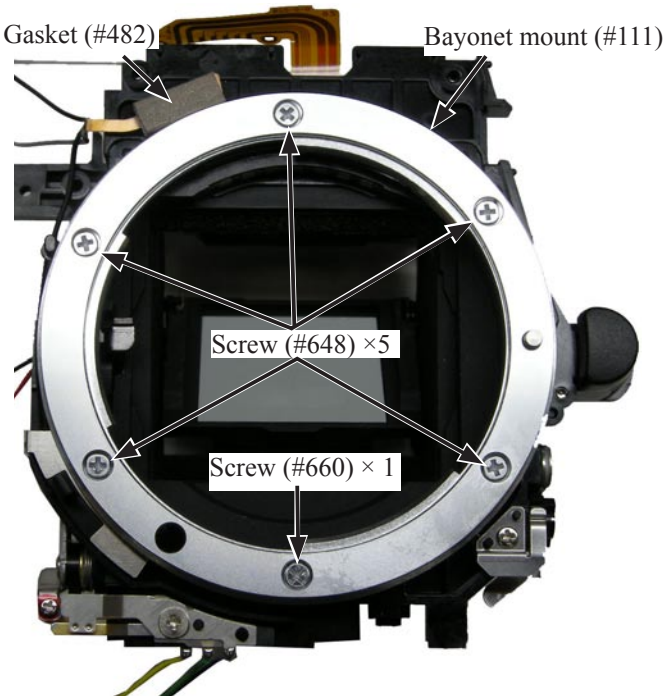

・Remove the three bayonet springs (#112) and the GND plate (#136).

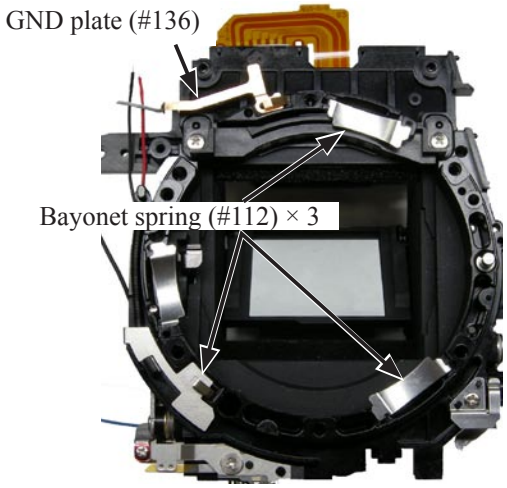

・Peel off the flocked sheet (#816).

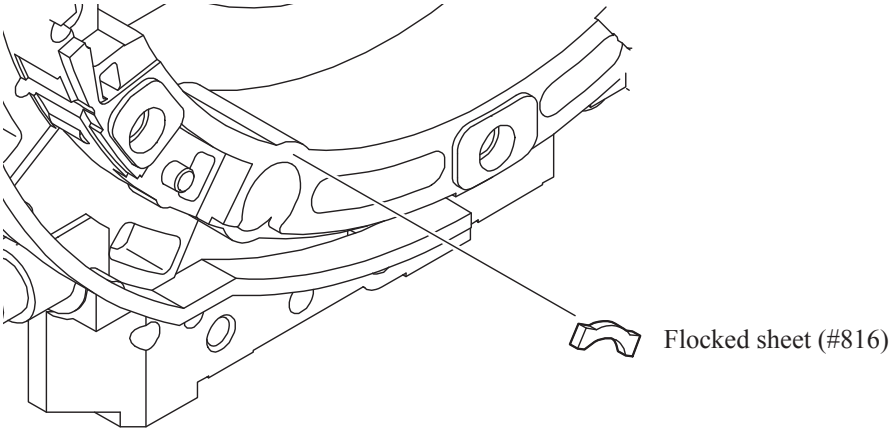

・Remove the F-min spring plate unit (#B135) from the bosses.

・Remove the spring (#132) and the f-min block (#131) (carefully to avoid popping out of the spring).

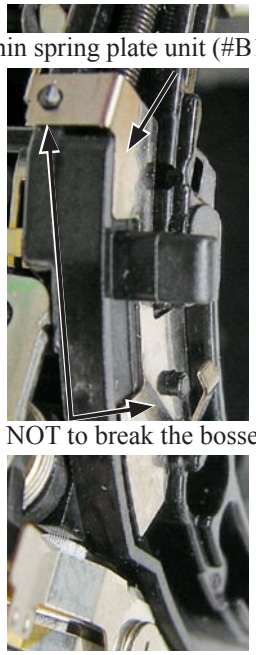

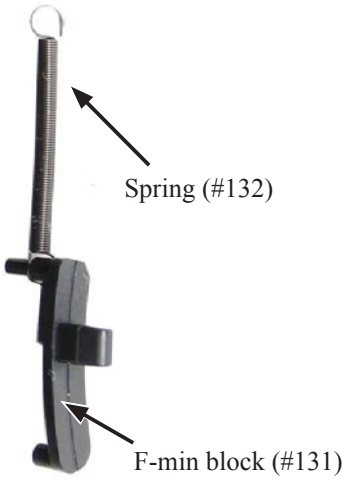

・Take out the two screw (#642).

・Remove the lens contact unit (#B2113).

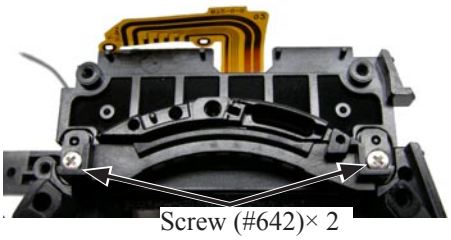

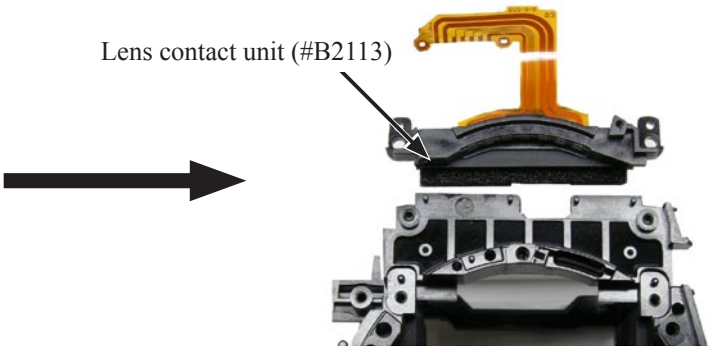

A/M change sw

・Take out the screw (#607), and remove the A/M setting spring (#123).

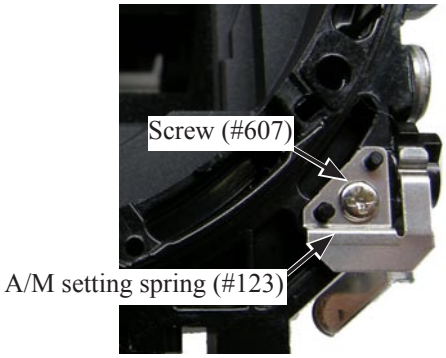

・Take out the screw (#642).
・Remove the A/M change SW B (#126).
・Remove the A/M change SW unit (#B125).

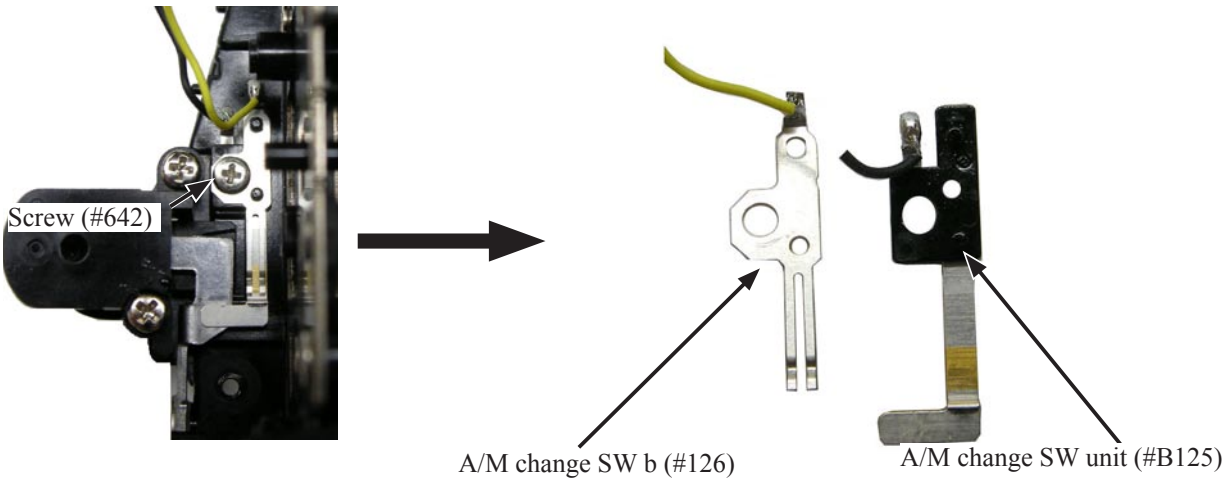

Release button

・Take out the two screws (#625).

・Remove the lens release holder (#115).

・Pull out the spring (#119) from the release button holder (#B116).

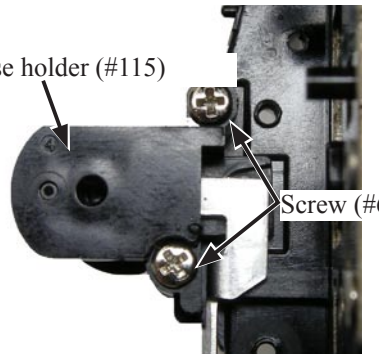

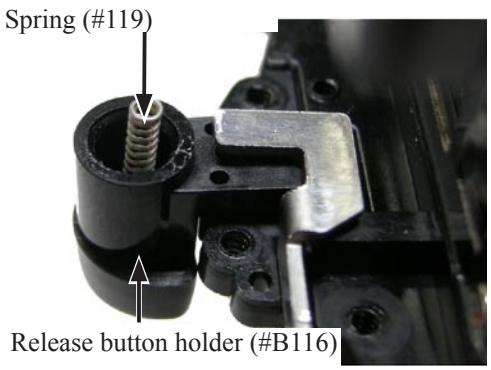

・Take out the screw (#630), and remove the vertical lever (#191).

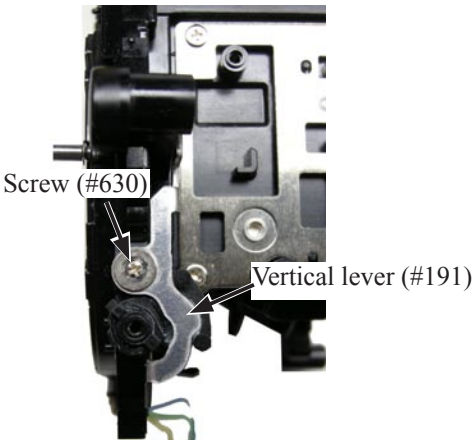

・Remove the release button holder (#B116).

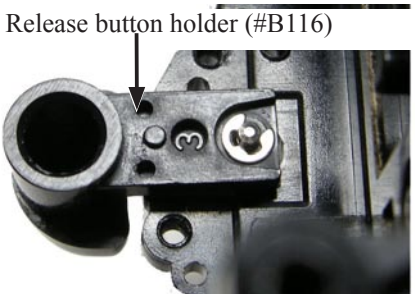

・Remove the A/M change cam (#122).

F-min SW

- Take out the screw (#642).
- Remove the f-min SW B (#134), and the f-min SW unit (#B133).
- Unsolder the wires (Black/Red).

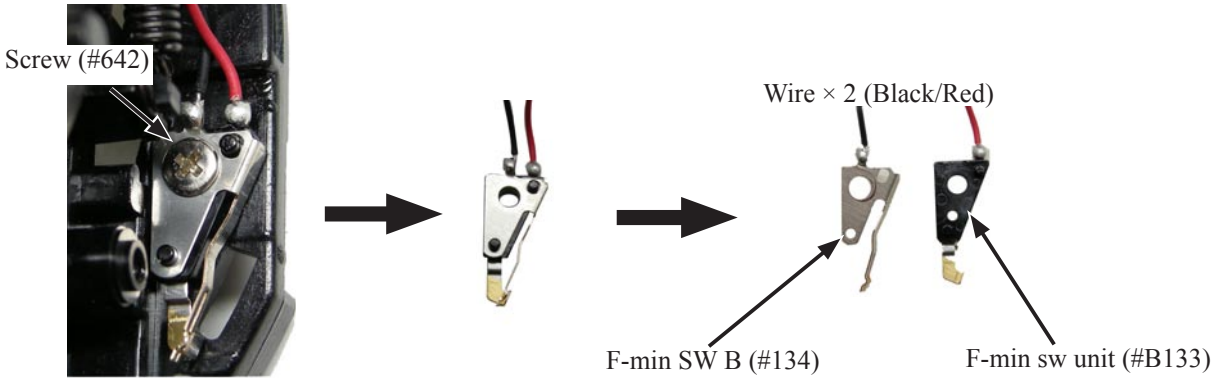

Preview sw

- Take out the screw (#627), and remove the preview sw unit (#B228) and the preview SW (#227).
- Unsolder the wires (Yellow/Green/Blue).

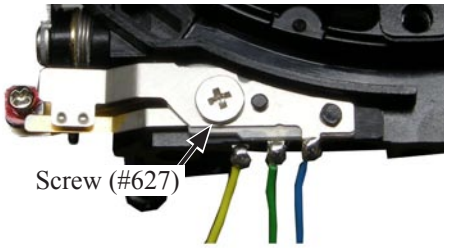

Wire × 3 (Yellow/Green/Blue)

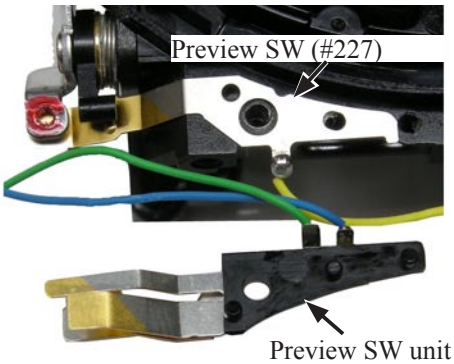

Main mirror unit

- Remove the spring (#206).
- Take out the four screws (#670), and remove the 45-deg. holding PCB unit .
- Remove the washers (#563 - #567). (Be careful NOT to lose them.)
- Remove the main mirror unit (#B2231) from the front body unit .

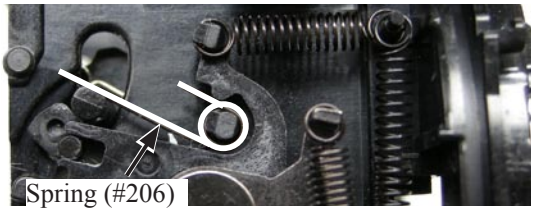

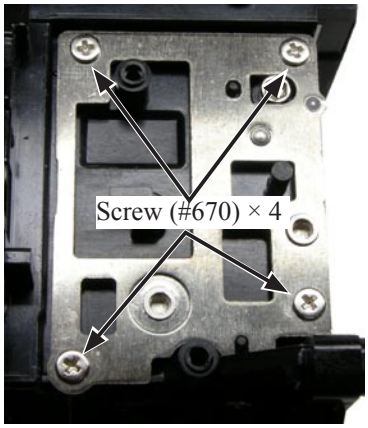

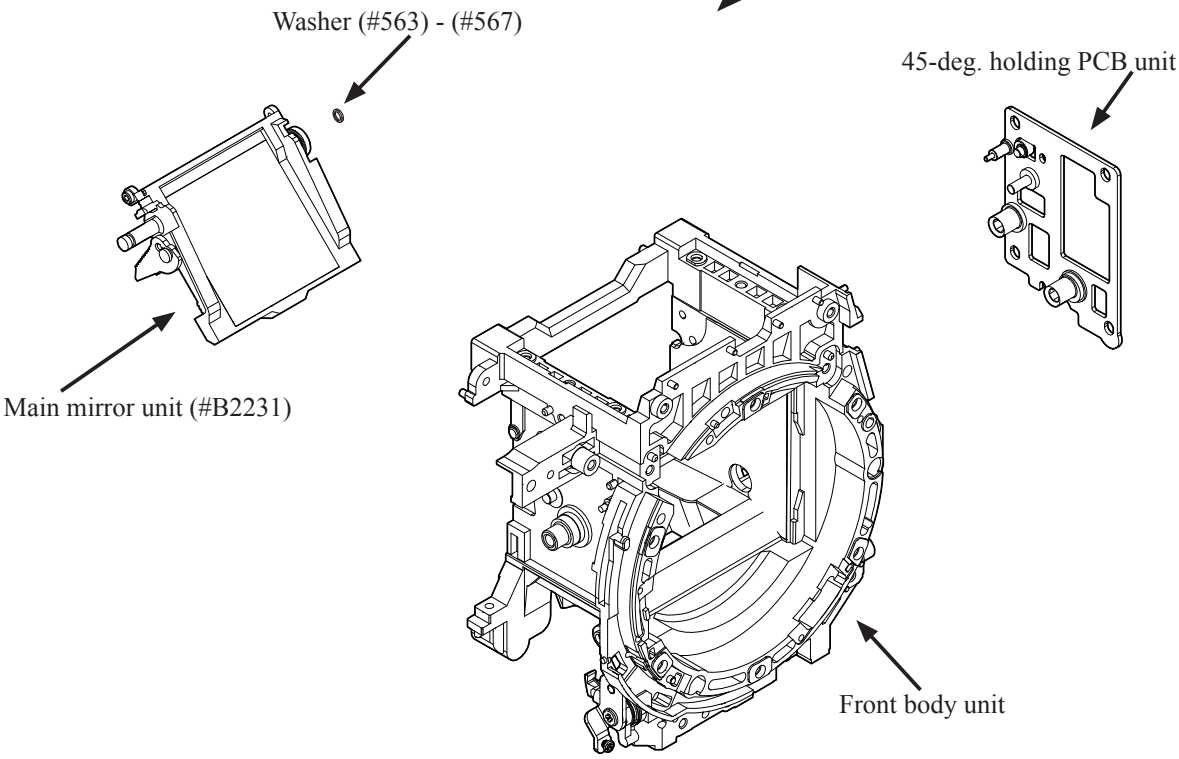

- Remove the preview lever-related parts.
- Remove the aperture lever-related parts.
- Remove the flocked sheets (#197, #198, and #199).

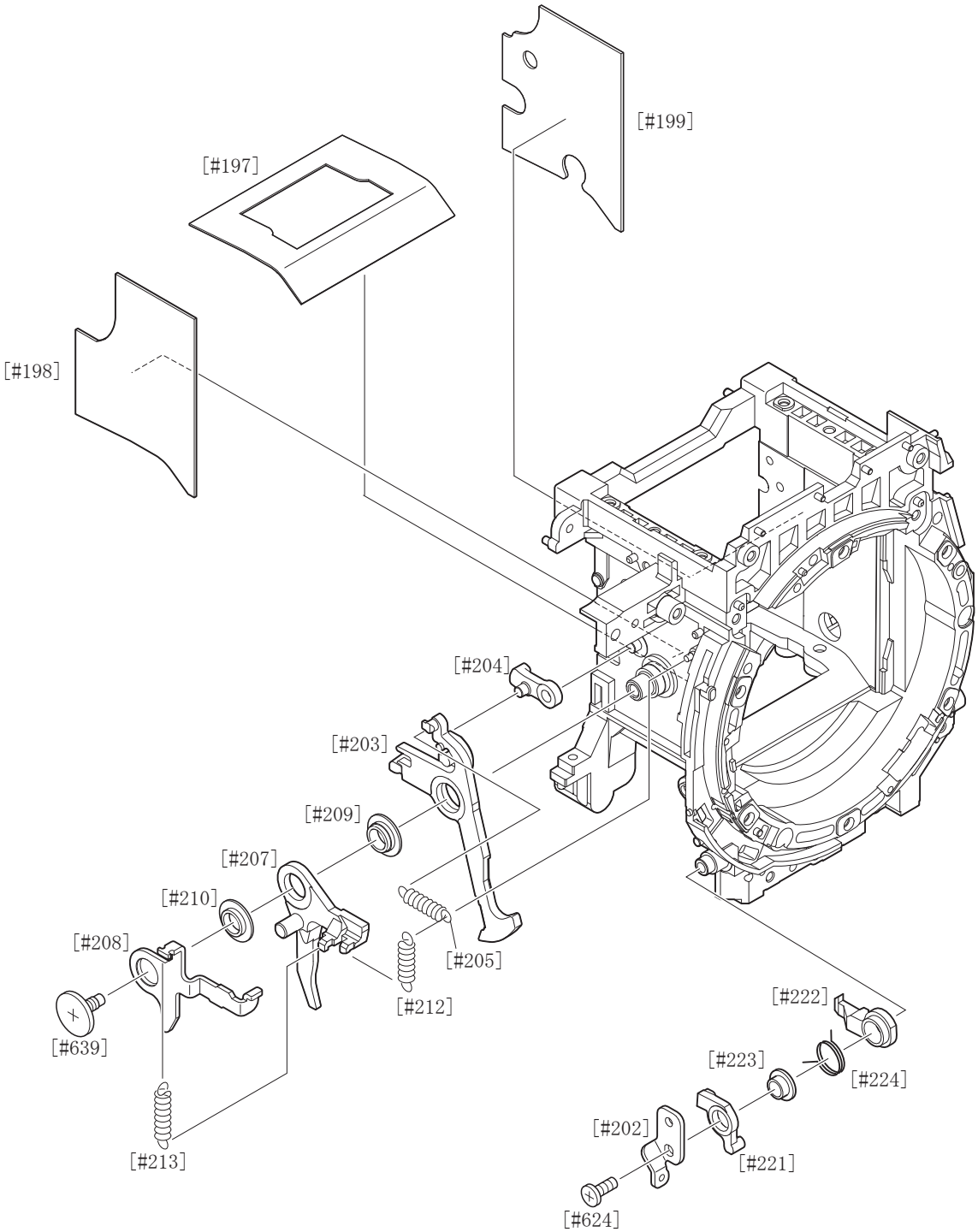

(#202) PREVIEW ADJUST PLATE	(#212) SPRING
(#203) SHUTTER CHARGE LEVER	(#213) SPRING
(#204) MIRROR UP LEVER	(#221) PREVIEW ACTUATING LEVER
(#205) SPRING	(#222) PREVIEW LATCH LEVER
(#207) APERTURE DRIVING LEVER	(#223) ROLLAR
(#208) APERTURE LEVER	(#224) SPRING
(#209) ROLLAR	(#624) SCREW
(#210) ROLLAR	(#639) SCREW

Assembly / Adjustment △ (Addition)

1. Front body unit

- Attach the flocked sheets (#197, #198, and #199).
- Mount the aperture lever-related.
- Mount the preview lever-related.
- Apply Grease: LEN317A to the inner surface of [#203, #207, and #208].
- Apply Grease: MZ-800SEL to [#209] and [#210] by dipping.

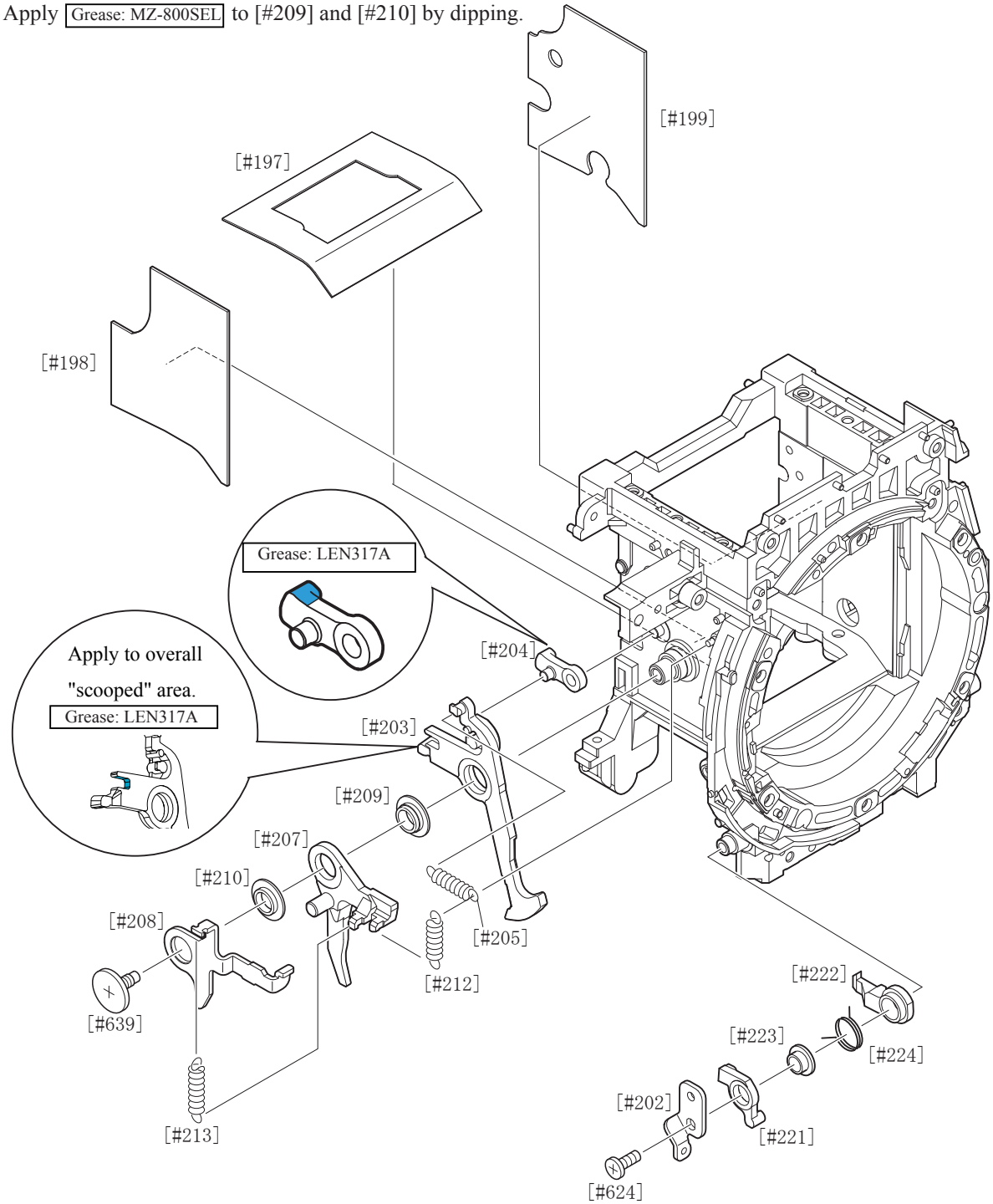

(#202) PREVIEW ADJUST PLATE	(#212) SPRING
(#203) SHUTTER CHARGE LEVER	(#213) SPRING
(#204) MIRROR UP LEVER	(#221) PREVIEW ACTUATING LEVER
(#205) SPRING	(#222) PREVIEW LATCH LEVER
(#207) APERTURE DRIVING LEVER	(#223) ROLLAR
(#208) APERTURE LEVER	(#224) SPRING
(#209) ROLLAR	(#624) SCREW
(#210) ROLLAR	(#639) SCREW

サービス計画課 M

Spring attaching position (Aperture lever)

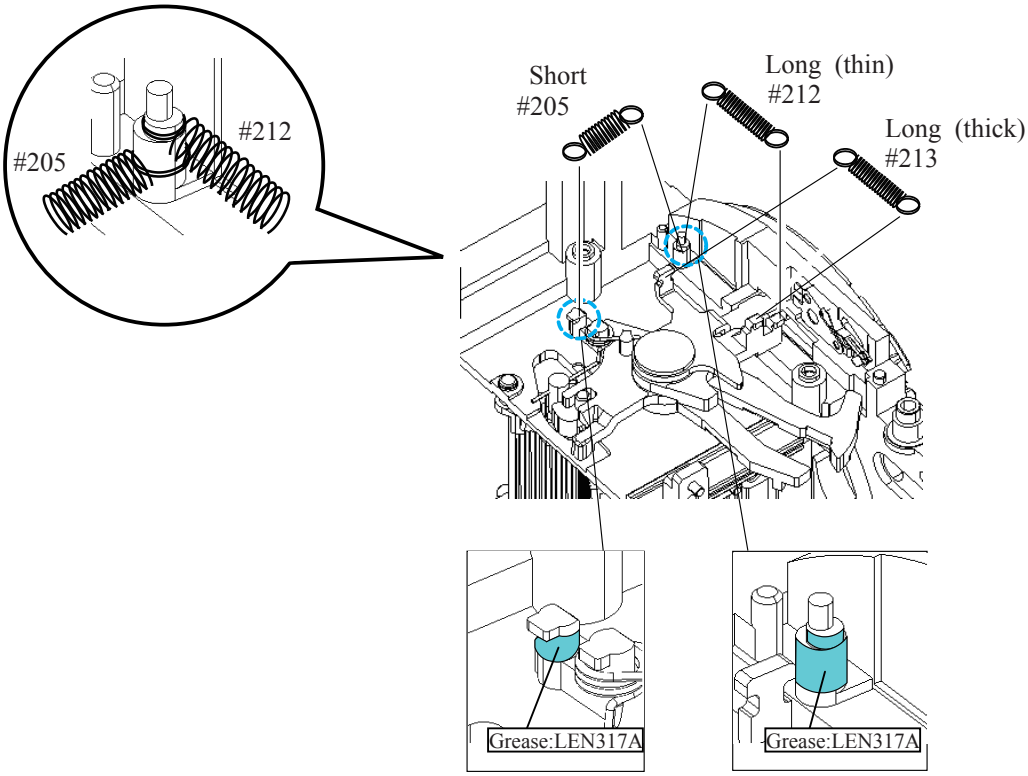

Spring attaching position (Preview latch lever)

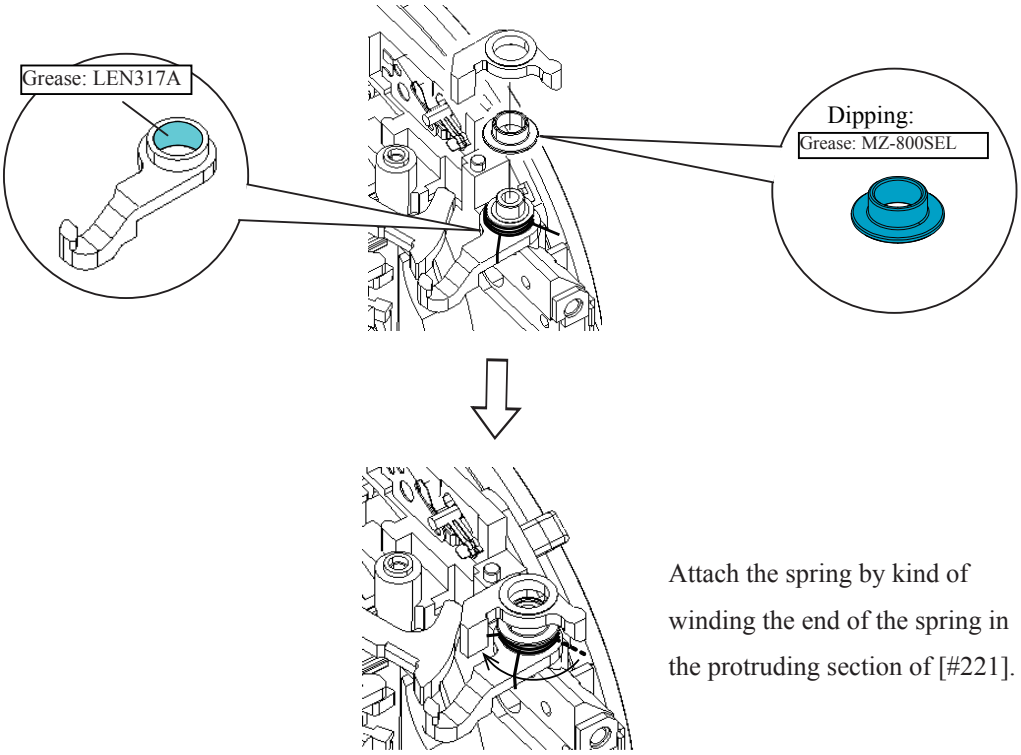

Attach the spring by kind of winding the end of the spring in the protruding section of [#221].

Main mirror unit

- Attach the washers (#563-#567) and the main mirror unit (#B2231) to the front body unit .
- Mount the 45-deg. angle holding PCB unit .
- Check the play of the main mirror unit (#B2231).
  If it does not meet the standard, adjust thickness by combining up to two washers so as to be within standard.
  (Standard: 0+0.15mm)
- Tighten the four screws (#670) in numeric order (① → ②).
- Hook the spring (#206).
- Attach the sponge (#785).

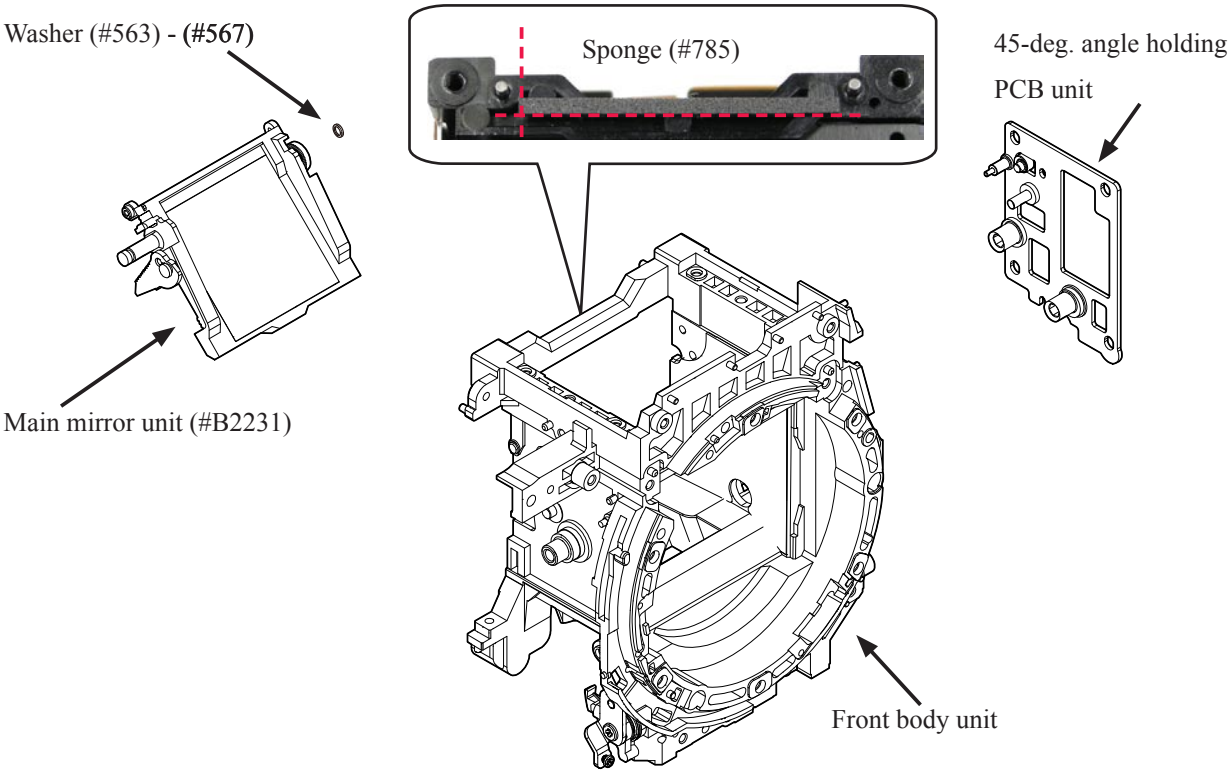

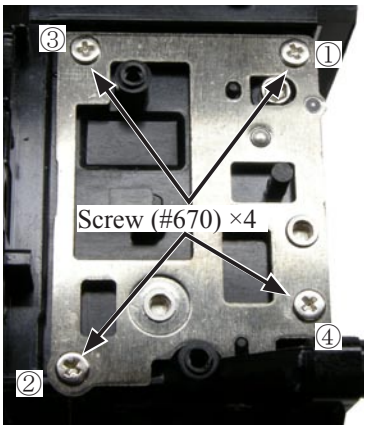

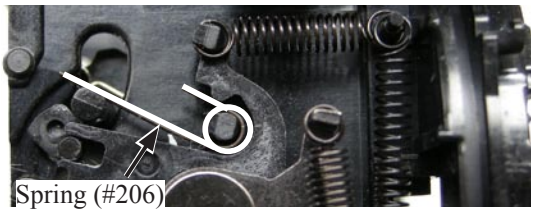

Dipping:

Grease: : LEN317A

Preview SW

・Insert the preview SW (#227) under the preview actuating lever (#221) as below, and assemble it.

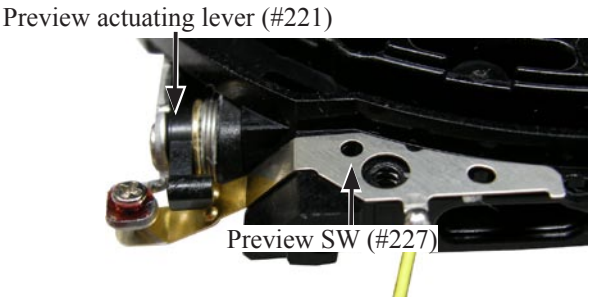

・Sandwich the preview actuating lever (#221) with the two head plates of preview SW unit (#B228).

・Mount the preview actuating lever (#221) by fitting with the bosses.

・Tighten the screw (#627).

・Solder the wires (Yellow/Green/Blue).

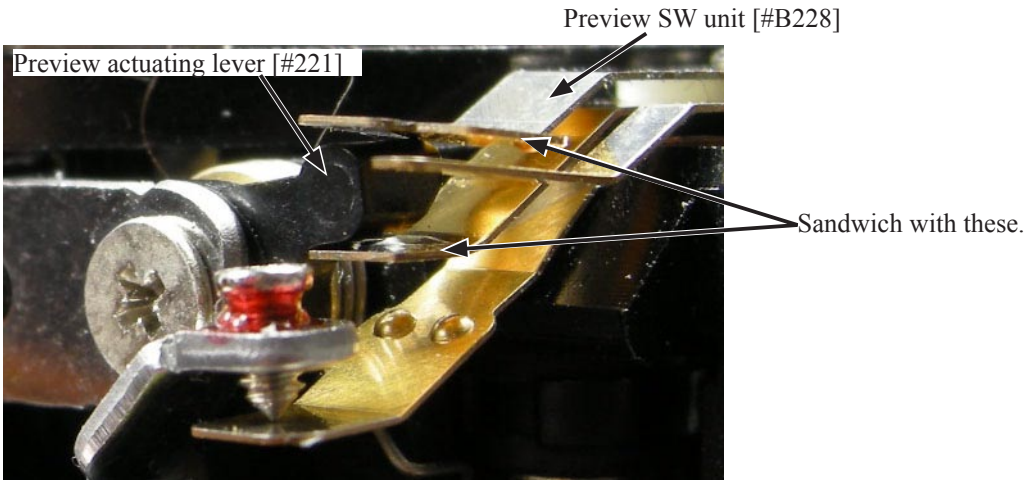

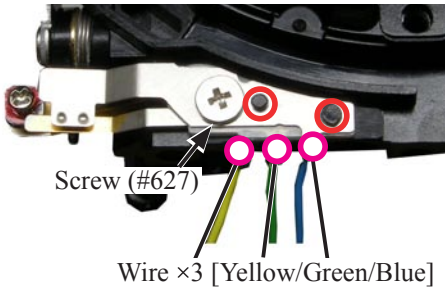

F-min SW

- Solder the wires (Black/Red).
- Mount the F-min SW B (#134) by fitting with bosses of the F-min SW unit (#B133).
  (The contact brush of [#134] must be placed on inside of [#B133] as below.)
- Tighten the screw (#642).

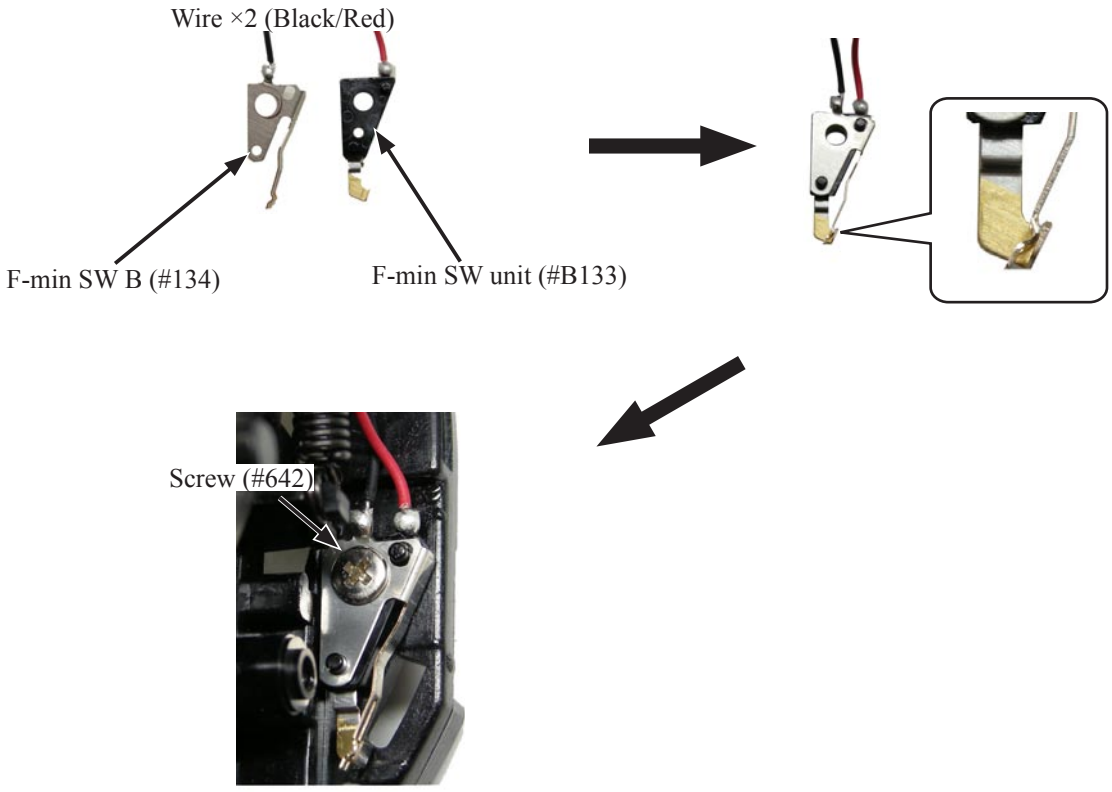

Release button

- Mount the A/M change cam (#122).

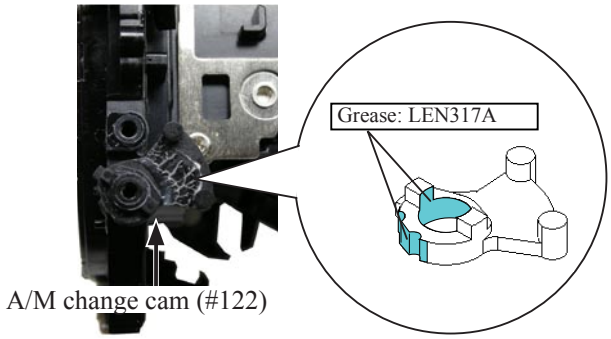

- Attach the release button holder (#B116).

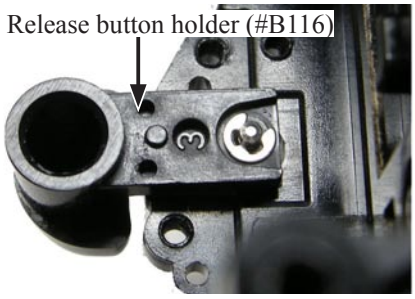

・Attach the vertical lever (#191), and tighten the screw (#630).

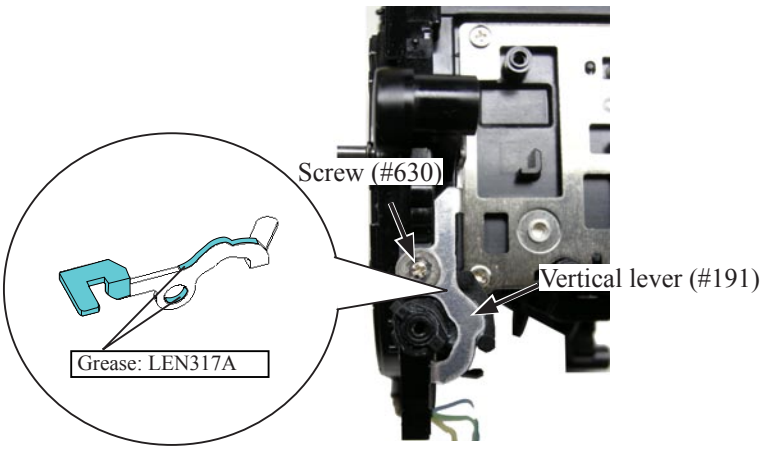

・Put the spring (#119) into the release button holder (#B116).

・Mount the lens release holder (#115).

・Tighten the screw (#625).

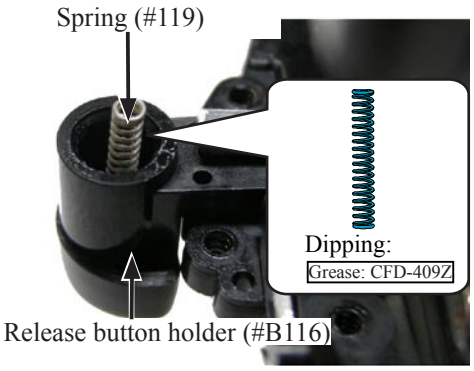

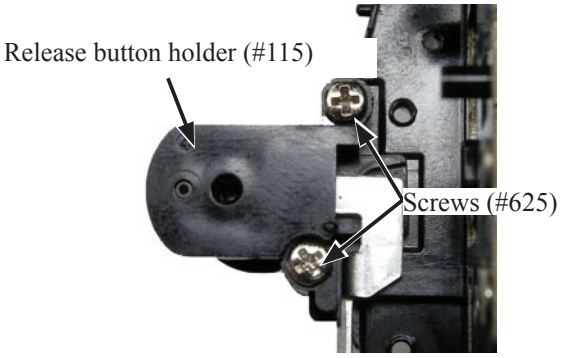

A/M change SW

- Mount the A/M change SW unit (#B125) on the front body.
- Attach the A/M change SW B (#126).
- Tighten the screw (#642).

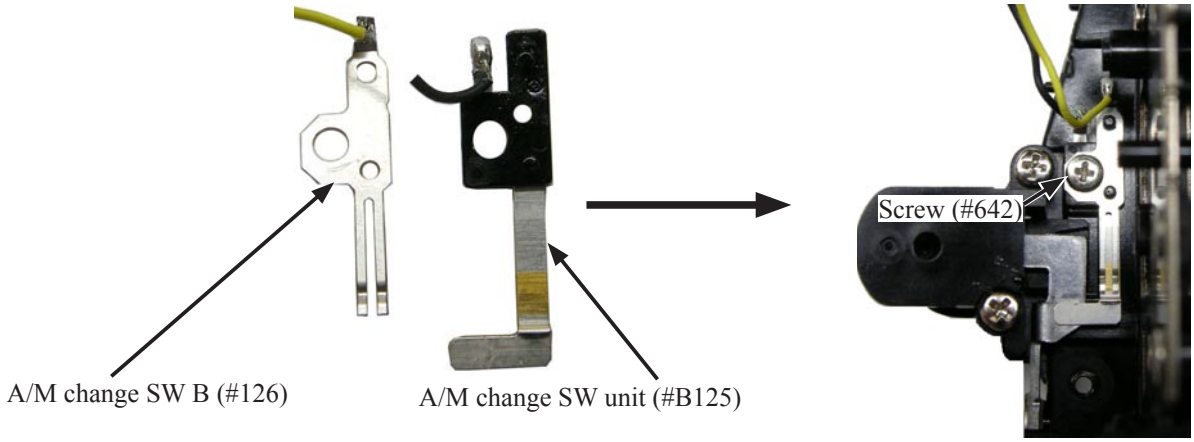

- Attach the A/M setting spring (#123) with screw (#607).

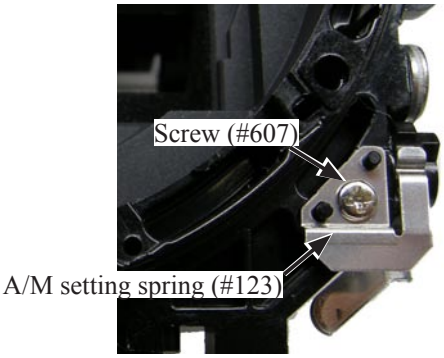

- Pass the FPC of the lens contact unit (#B2113) through inside of the front body (#B22) as below.
- Tighten the two screws (#642) in numeric order (①→②).

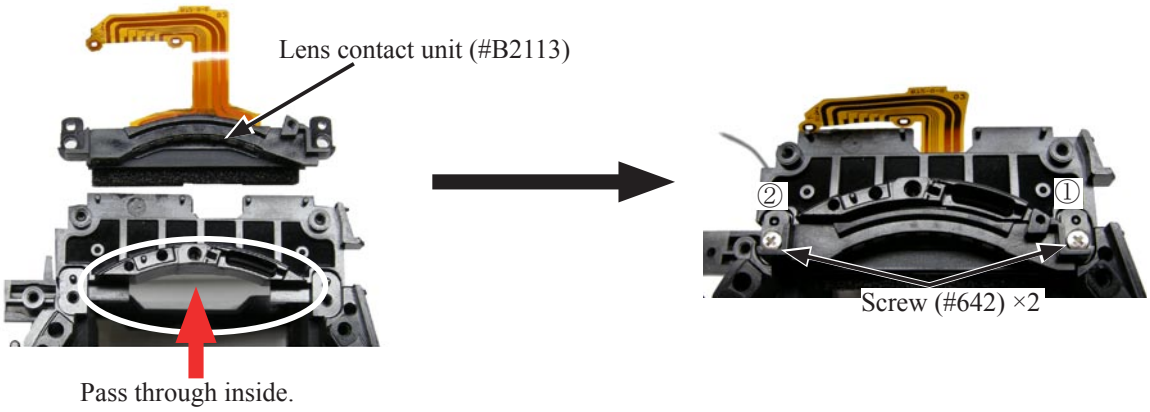

Bayonet

- Attach the spring (#132) to the F-min block (#131).
- Mount the front body (#B22) on the three guides.

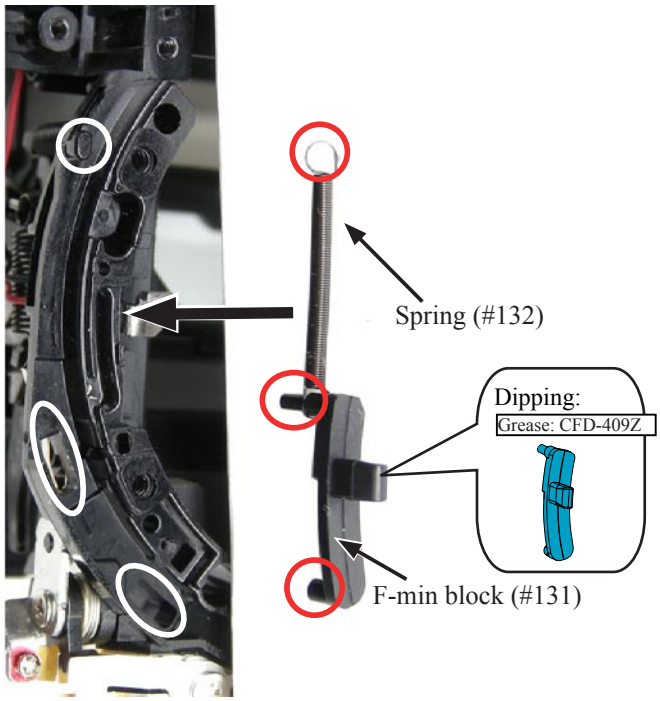

- Attach the F-min spring plate unit (#B135) by fitting with two bosses.

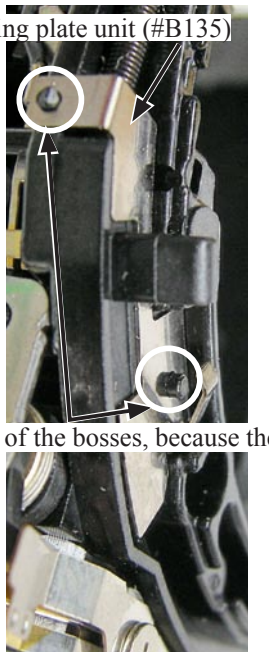

Be careful of the bosses, because they can be easily broken.

・Adhere the flocked sheet (#816).

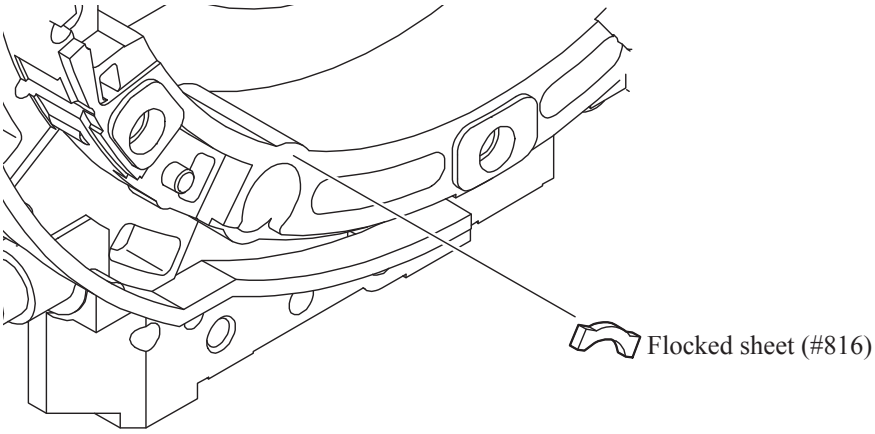

・Attache the three bayonet springs (#112) and the GND plate (#136).

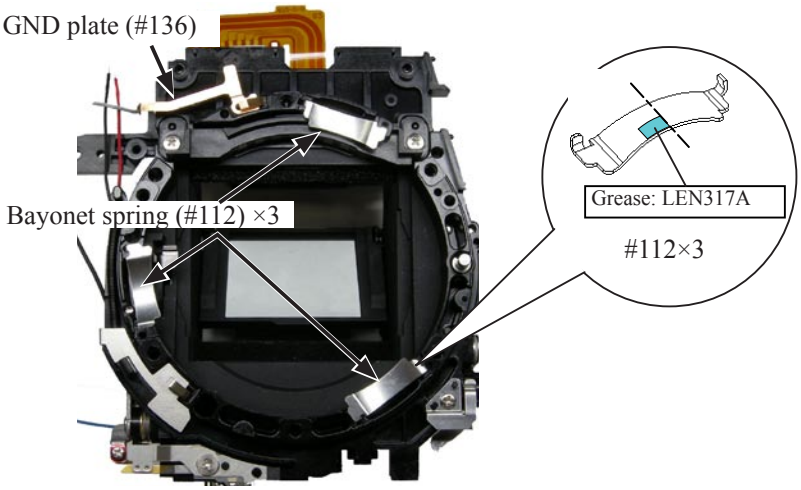

・Mount the bayonet mount (#111). Tighten the one screw (#660) and the five screws (#648) in numeric order (①→⑥).

・Attach the gasket (#482) so that it is not placed on the mount.

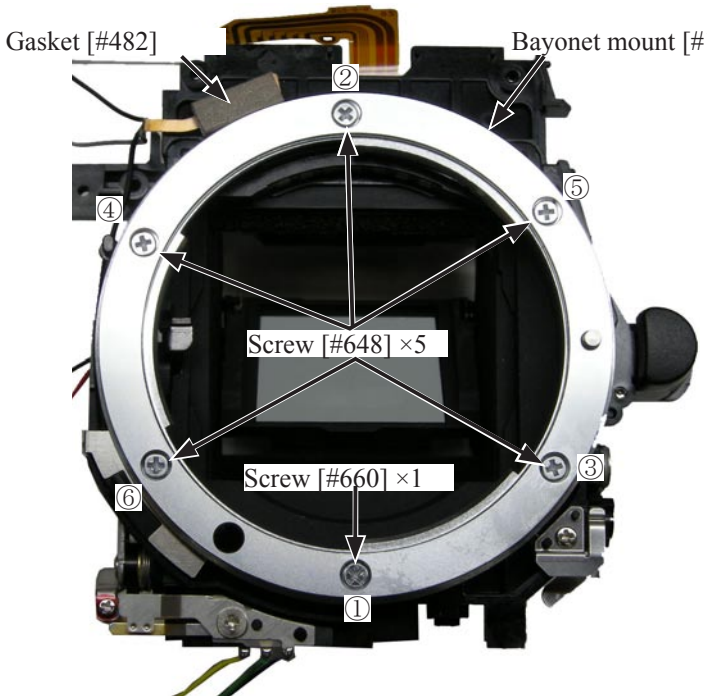

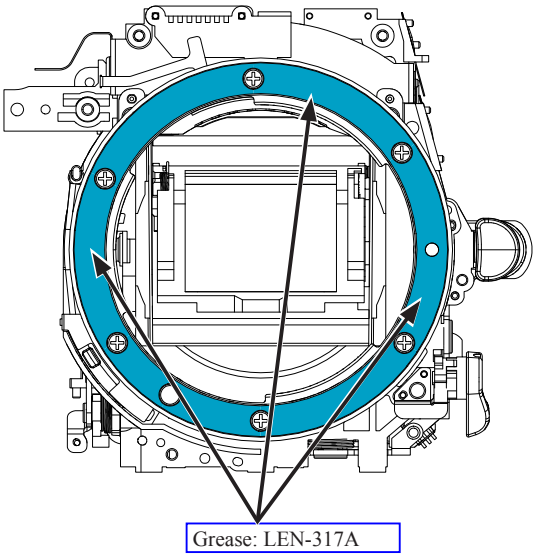

AF driving base

・Mount the AF driving base (#B172), and tighten the two screws (#637).

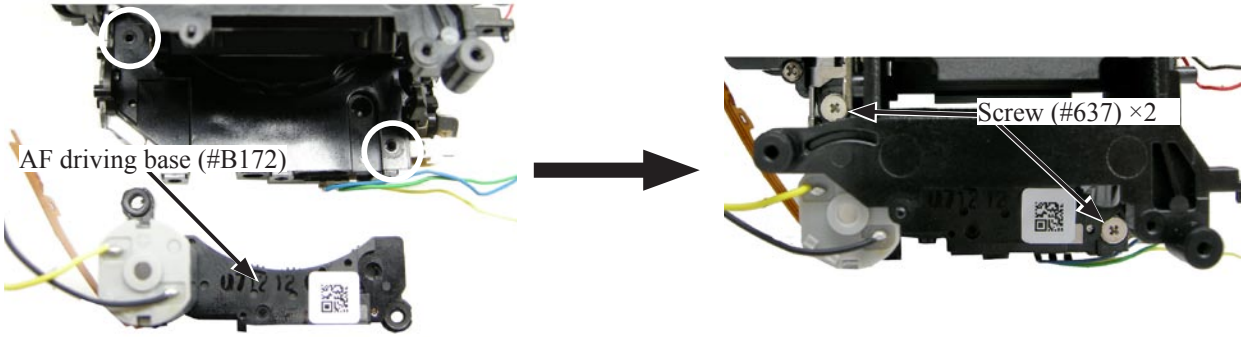

・Attach the coupling shaft (#185).

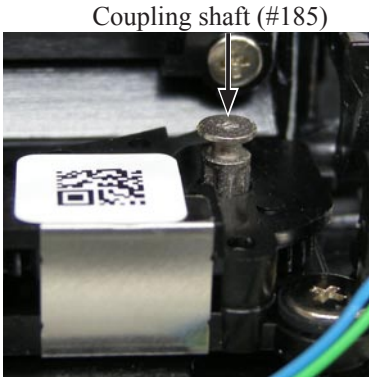

・Hook the spring (#195) temporarily as below.

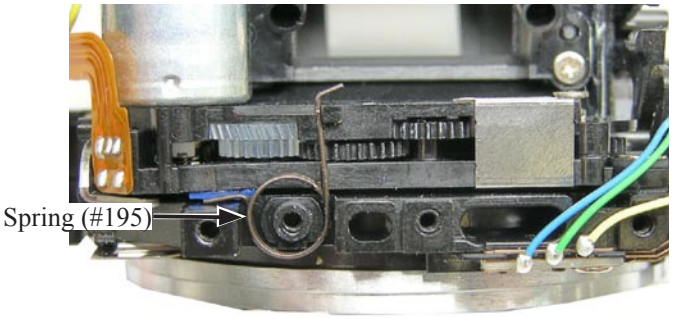

・Assemble the lever (#193) into the coupling shaft (#185) by fitting in the groove.
・Tighten the screw (#630).

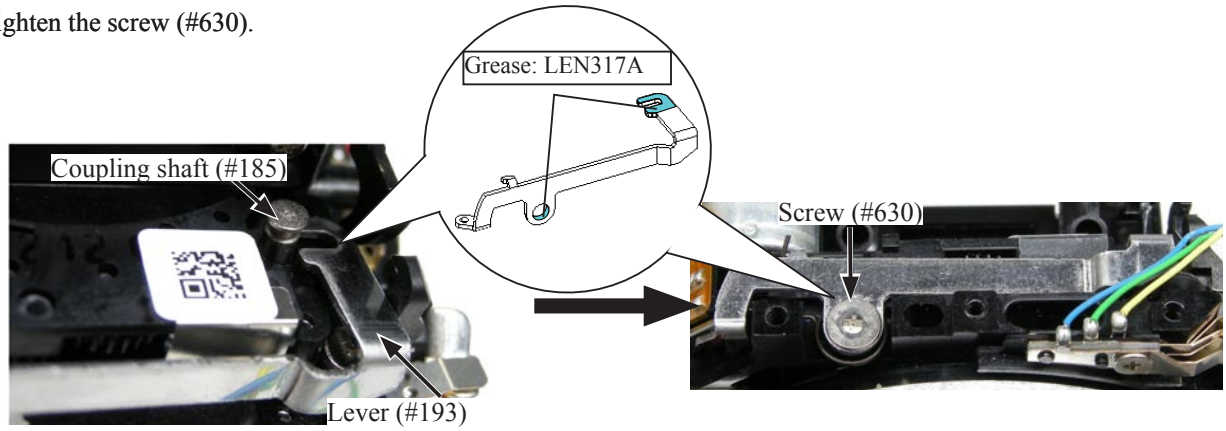

・Hook the spring (#195) as below.

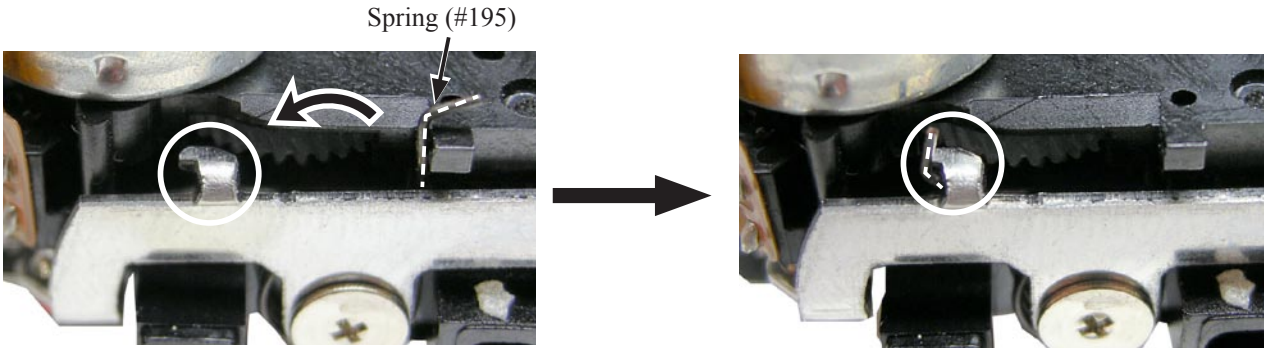

Aperture control PCB

・Assemble the aperture control unit (#B241RP) and the sequence base plate (#B91).

・Tighten the screw (#630) and (#628).

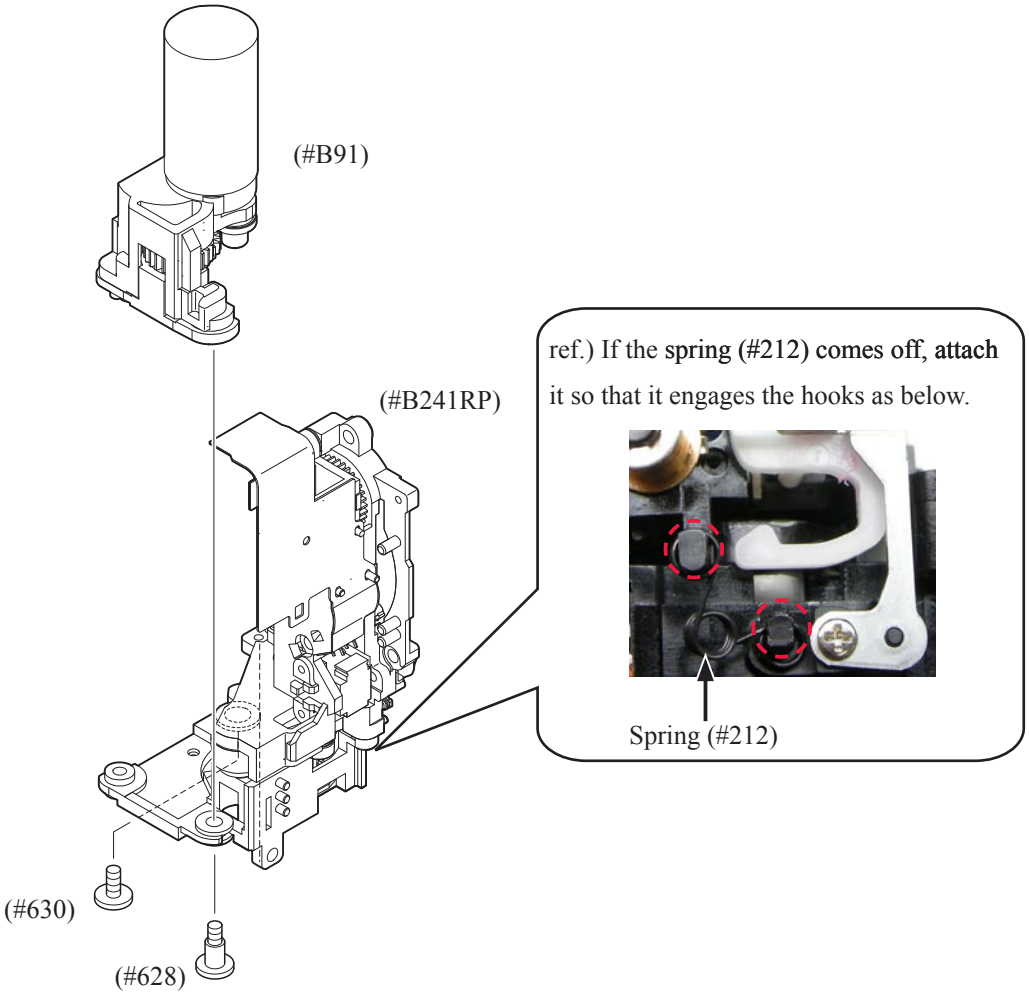

・Turn the segment gear of the aperture control unit (#B241RP) in the direction of the arrow.

・Push in the latch lever and lock it.

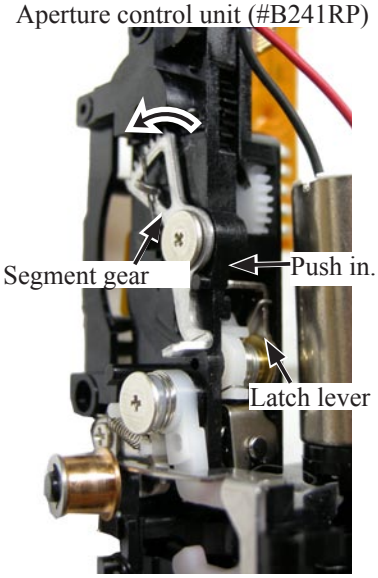

・Confirm that the SQ lever is not hooked in the reset lever.

(If it is, turn the gear in the direction of the arrow so as to separate the SQ lever, and unhook it.)

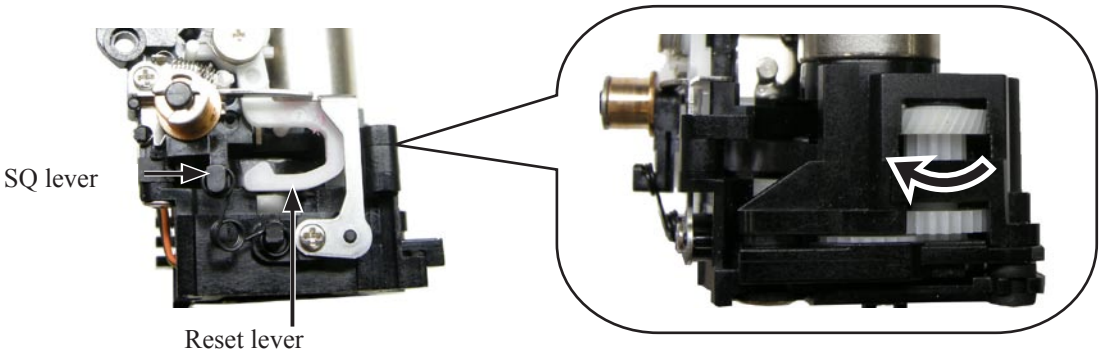

・Hook the shutter charge lever (#203) to the preview latch lever (#222).

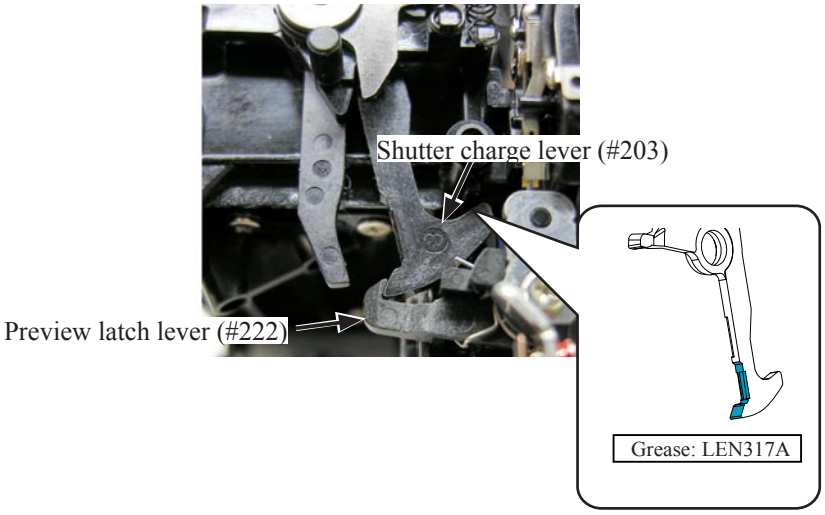

・Lower the aperture lever (#208).

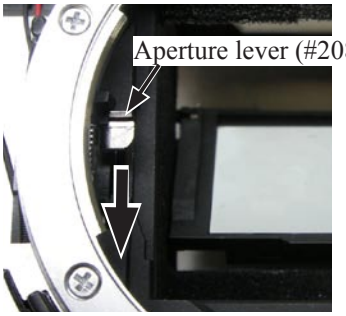

・The shutter charge lever (#203) and the aperture driving lever (#207) will form an inverted-V-shaped opening.

・Put the SQ-lever arm section in there as below.

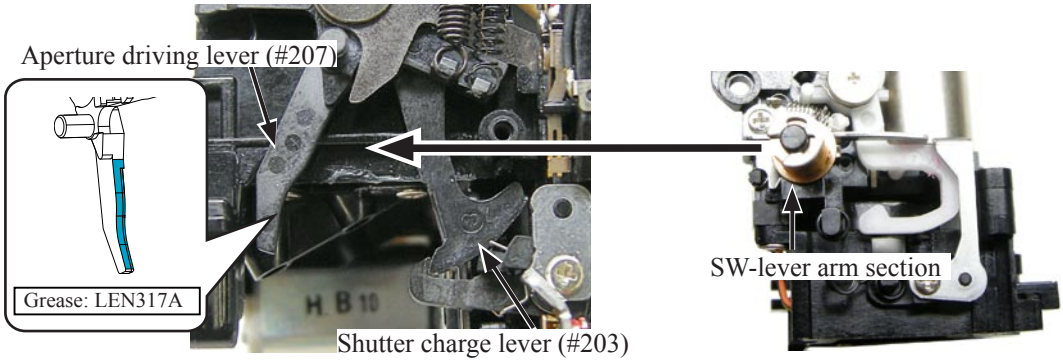

・Fitting with the bosses.

・Tighten the two screws (#624) in numeric order (①→②).

・Tighten the screw (#698).

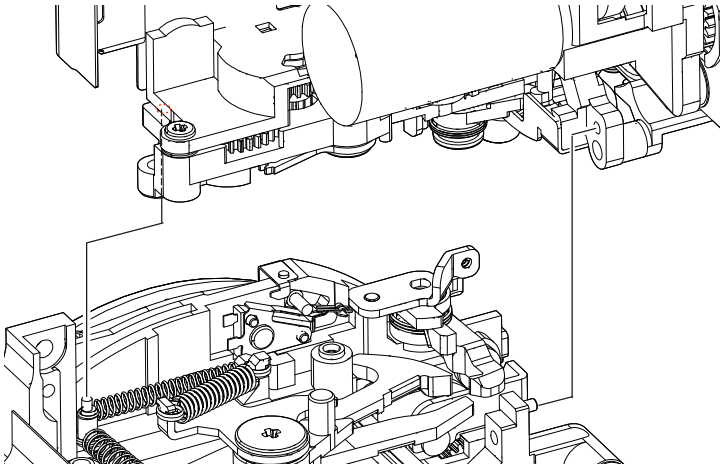

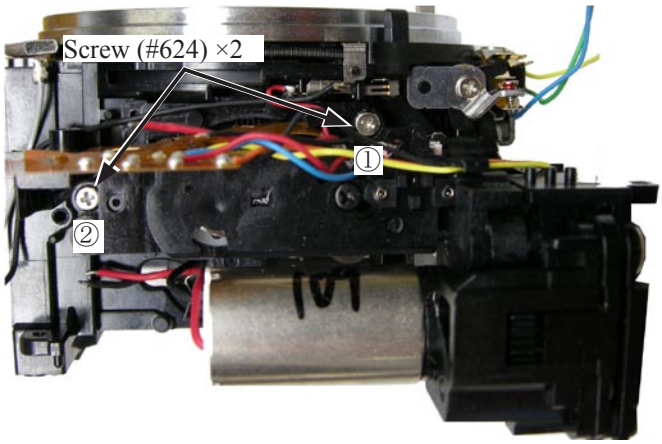

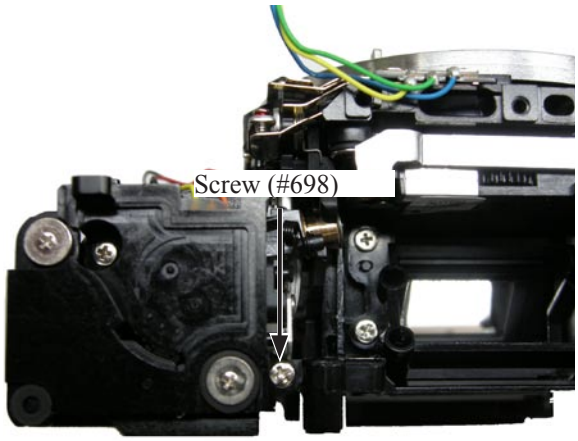

・Arrange the wires (Black/Red) of F-min SW among the boss.

・Arrange the wires (Blue/Green/Yellow) of the preview SW unit under the guides.

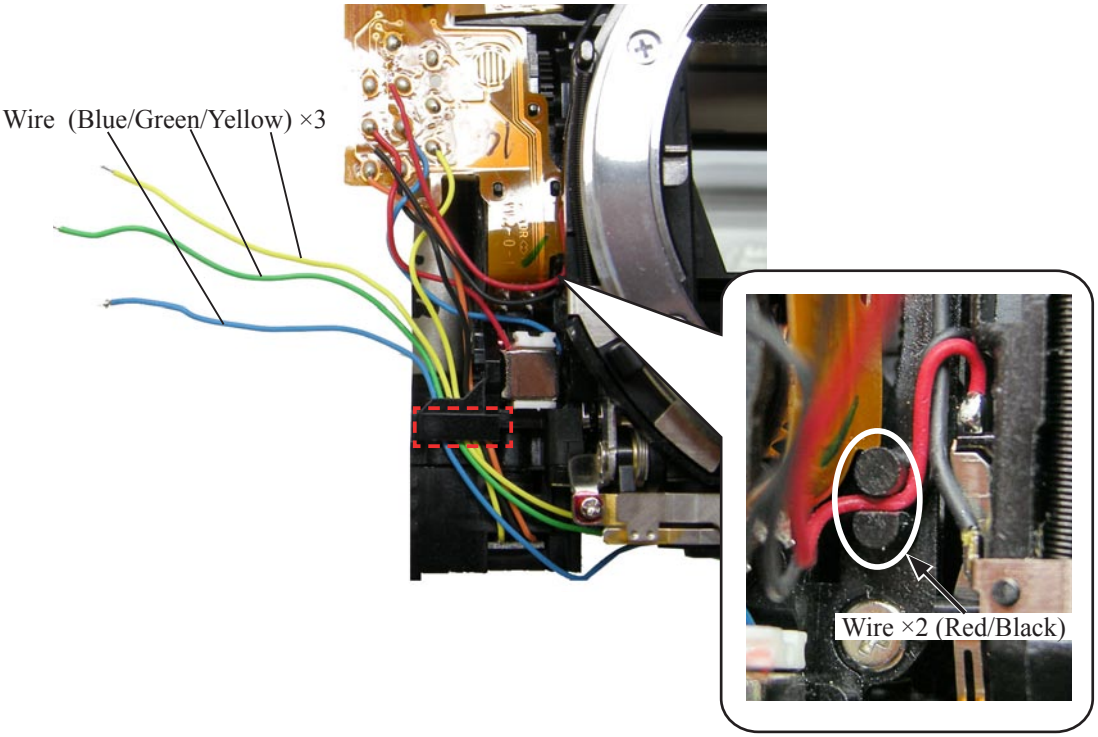

Front body FPC

・Mount the holder (#560).

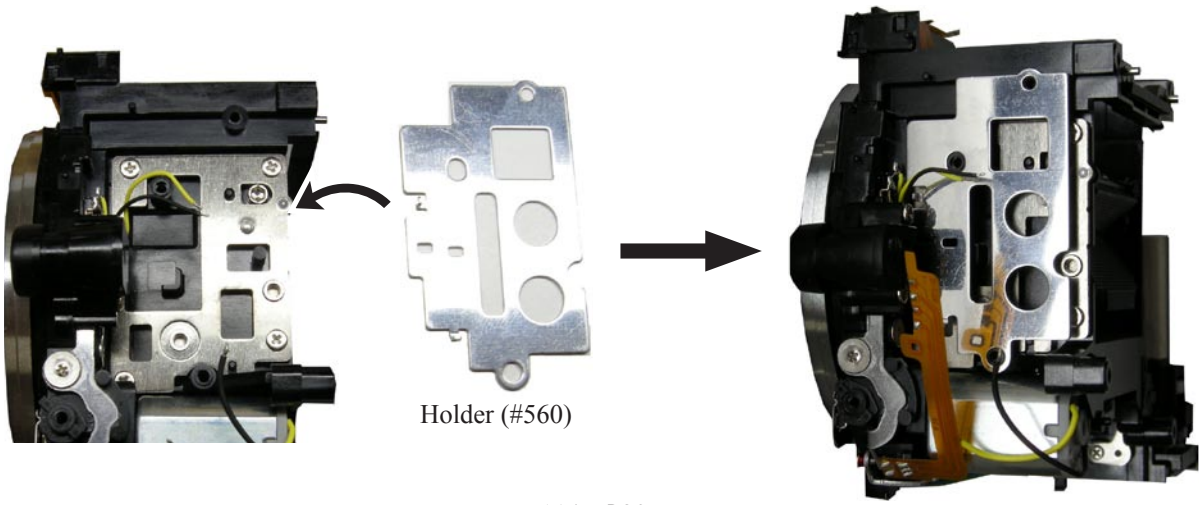

・Mount the front body FPC (#B1009) by fitting with the bosses.

・Tighten the one screw (#670) and the two screw (#640).

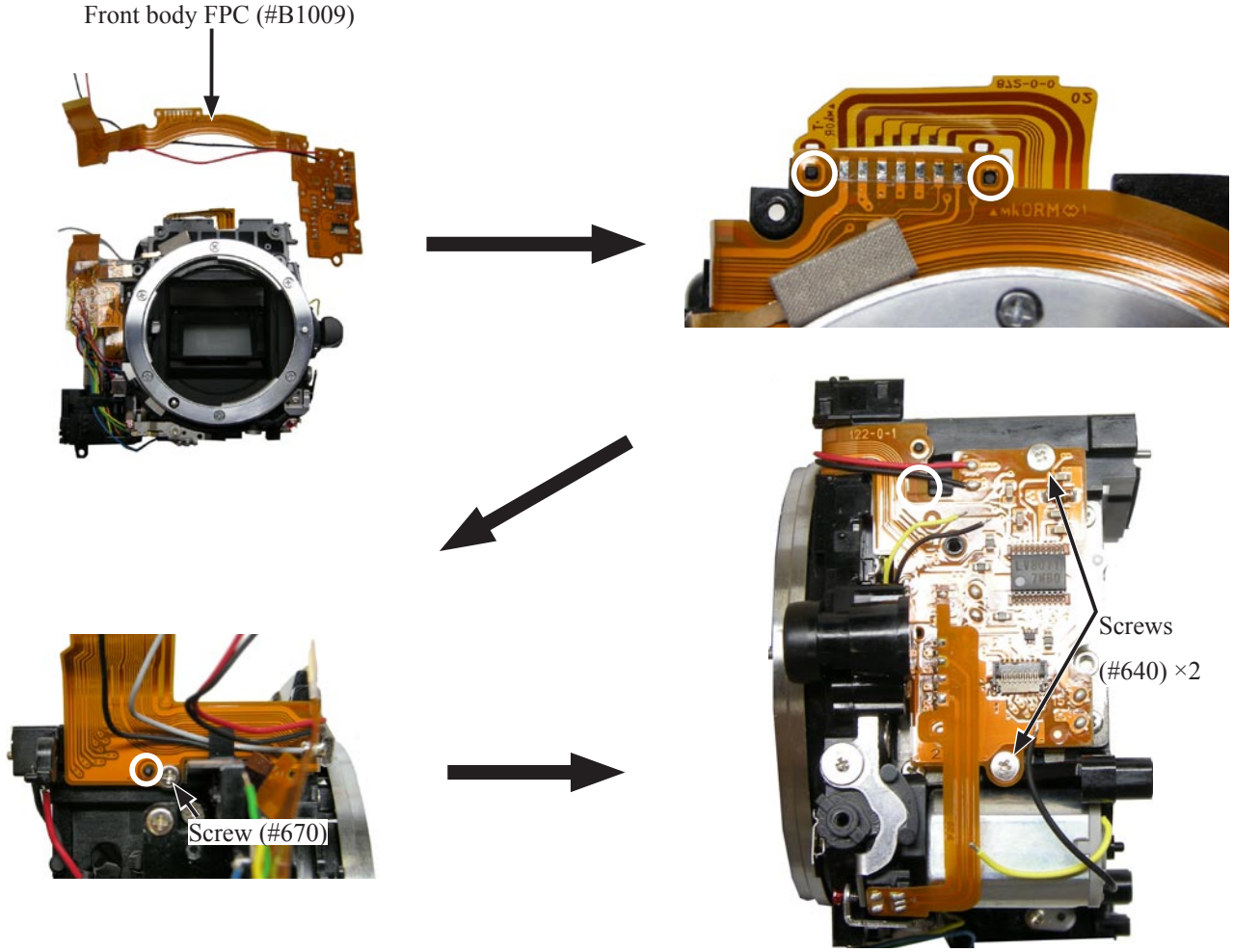

・Mount the BKT-SB FPC unit (#B1014) by fitting with the bosses.

・Mount the AF driving base (#B172) by fitting with the bosses.

・Insert the tip of the FPCs into each hole.

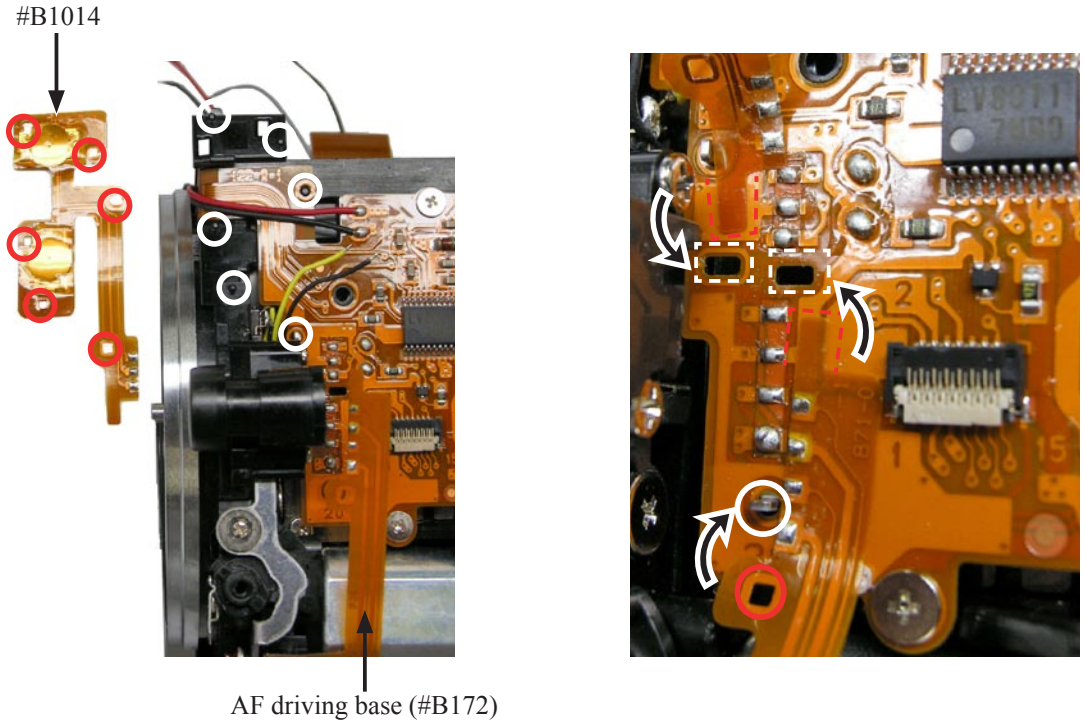

- Fold down the FPC of the lens contact unit (#B2113) toward the bayonet side by fitting with the bosses.
- Make the three solder bridges.
- Solder the wires (Black/Yellow) of the A/M change SW unit.
- Solder the wires (Black/Yellow) of the AF driving base (Black/Yellow).

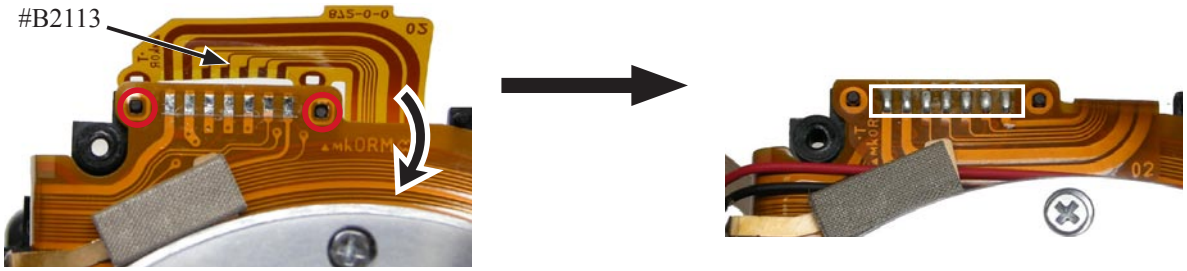

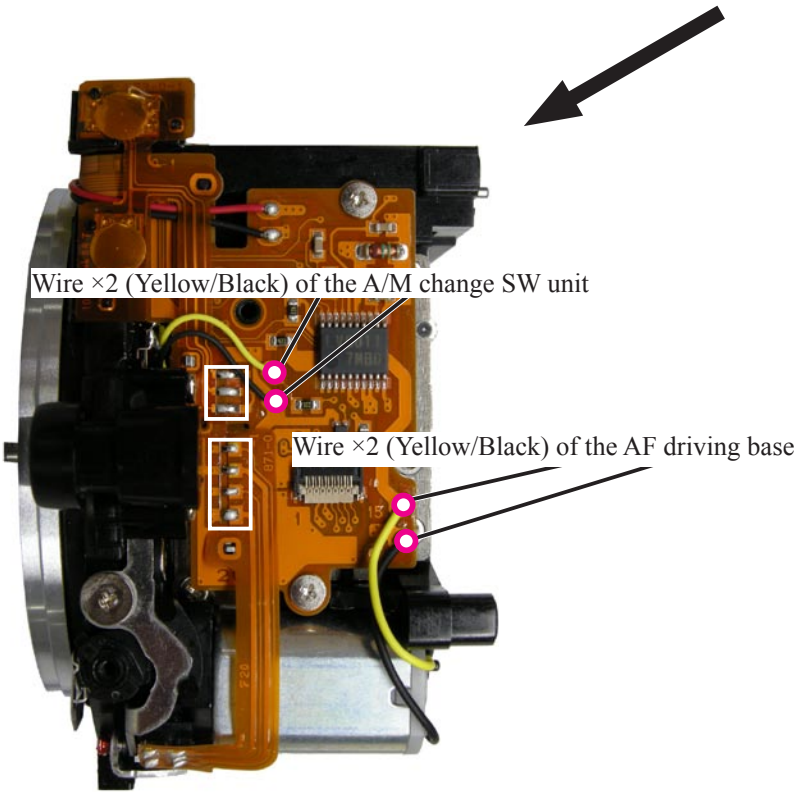

- Solder the wires (Red/Black) of the Fmin-SW.

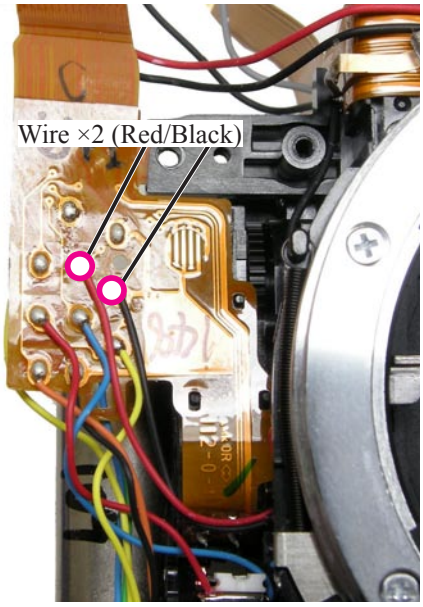

AF CCD unit

- Insert the three springs (#170).
- Mount the AF CCD unit (#B2163).
- Bend the FPC inward.

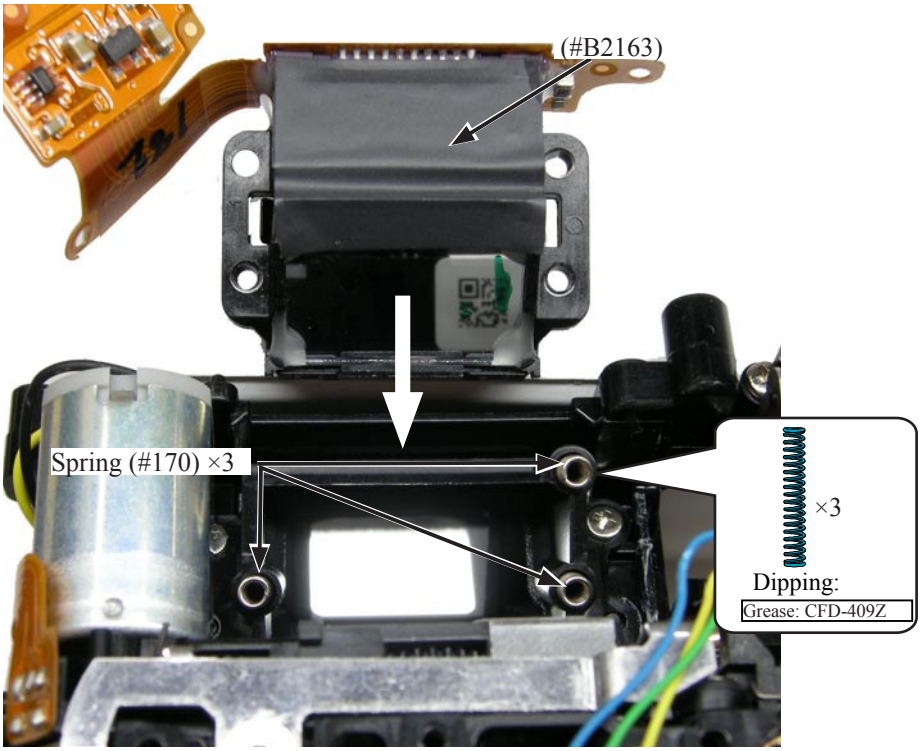

- Turn the three screws (#173) lightly all the way with HEX KEY WRENCH (φ1.5mm) until they stop, then give them two turns counterclockwise.

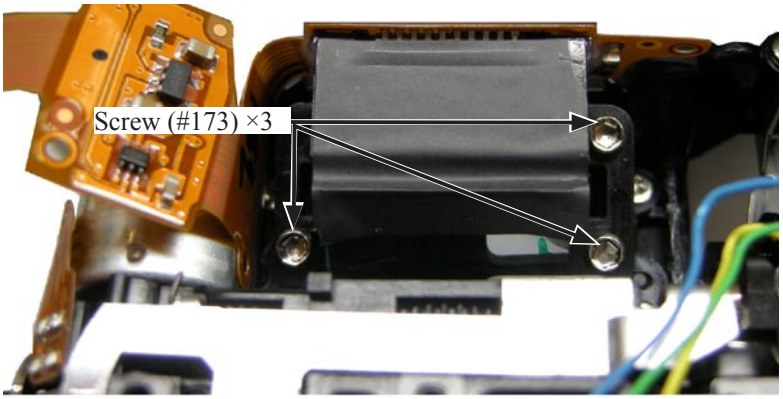

・Connect the FPC of the AF CCD unit (#B2163) to the connector.

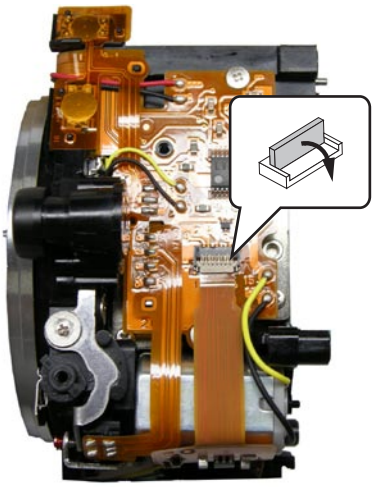

Shutter unit

・Turn the gear of the aperture control unit in the direction of the arrow, and raise the mirror.

・Attach the shutter unit (#B31) with two screws (#638).

・Attach the sponge (#817).

・Turn the gear in the direction of the arrow so that the index can be within the range of the initial position.

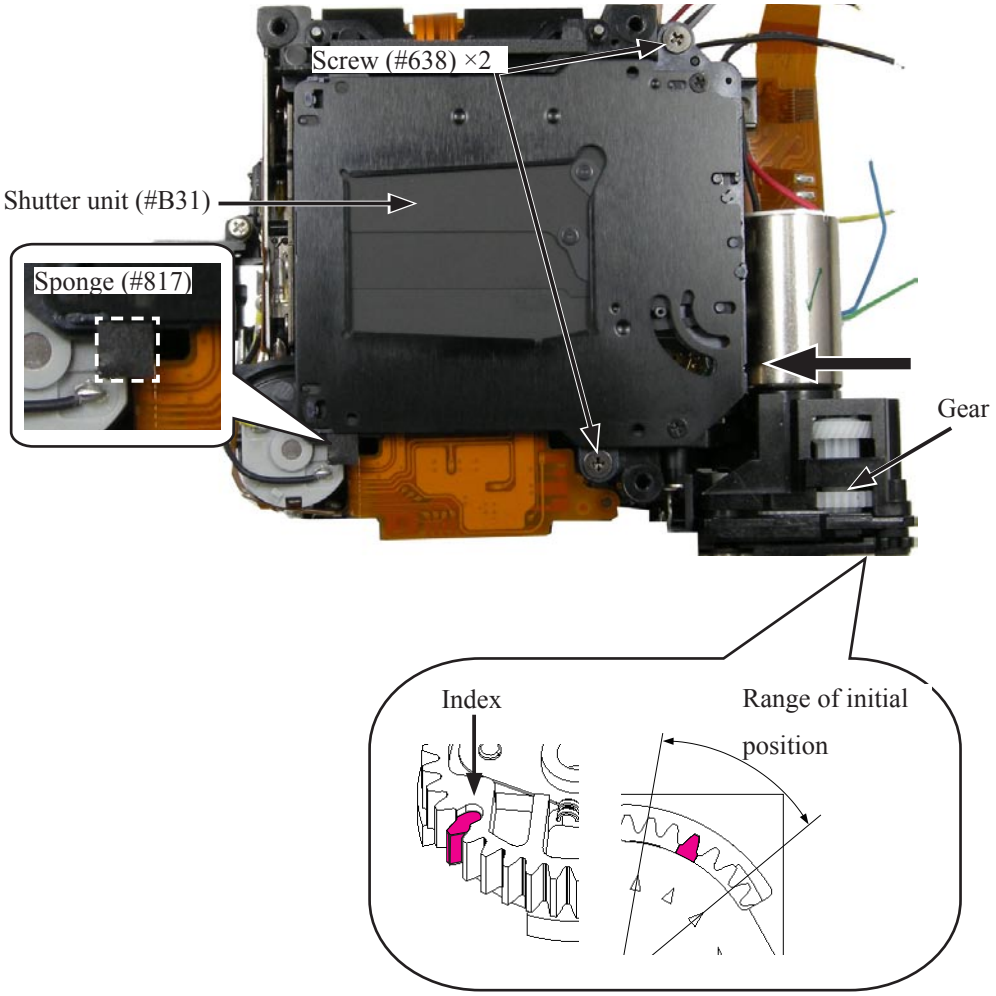

・Make the solder bridge, and attach the tape (#778).

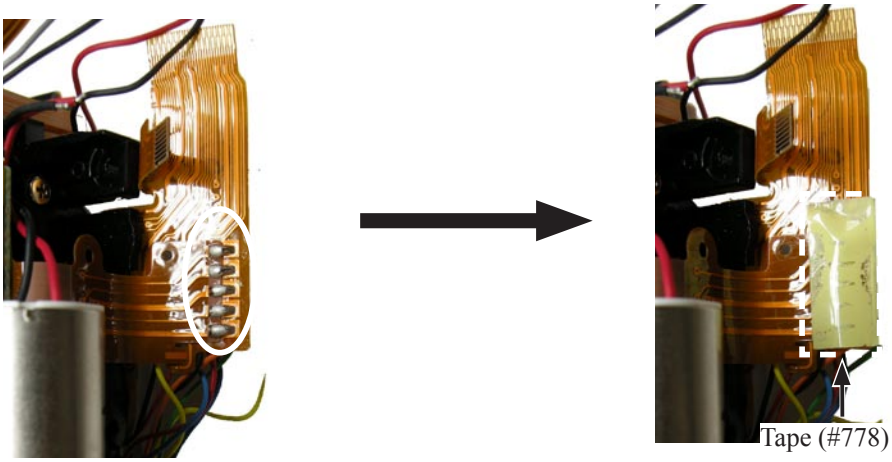

SB PCB

・Attach the tape [#TA0009 (5×7)].

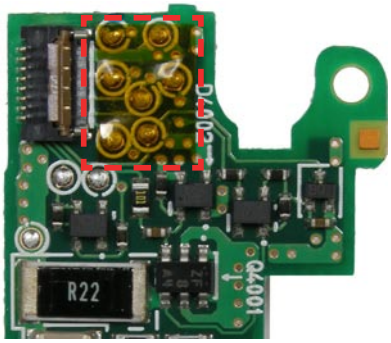

・Attach the SB PCB (#1040) with the screw (#683).

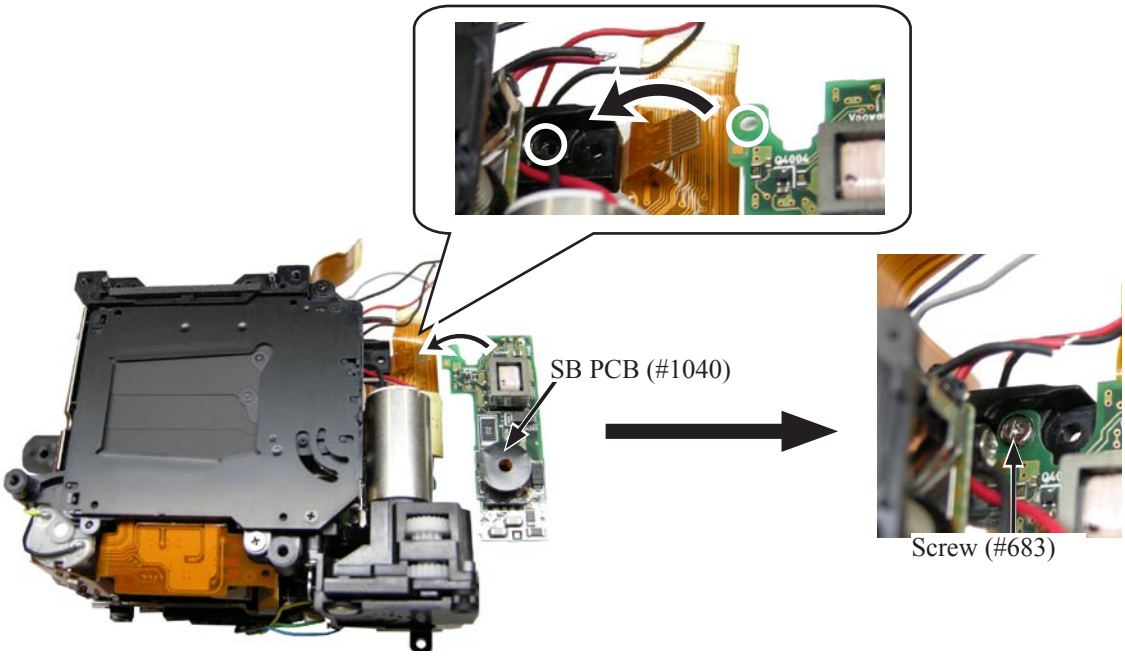

・Connect the FPC of the aperture control unit (#B241RP) to the connector.

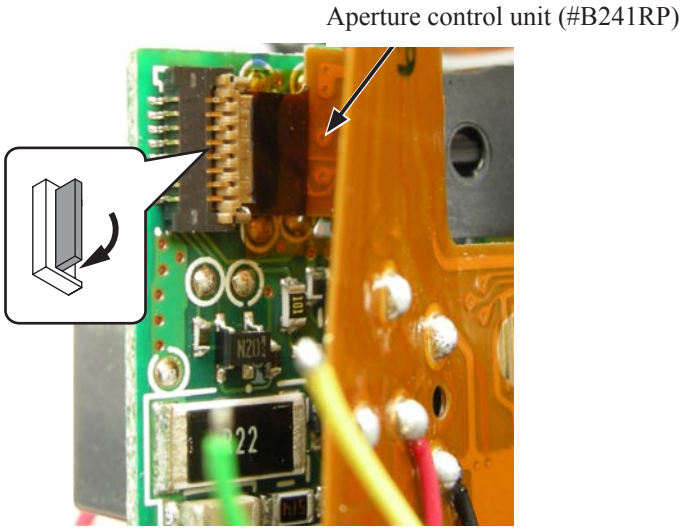

Height adjustment of AF coupling shaft

① Set the A/M change cam (#122) to AF side.
[In this state, the coupling shaft (#185) is protruded from the bayonet surface.]

② Adjust the height of the coupling shaft (#185) with the screw (#652) to become "1.7±0.15mm".

③ After the adjustment, secure the screw (#652) with the screwlock.

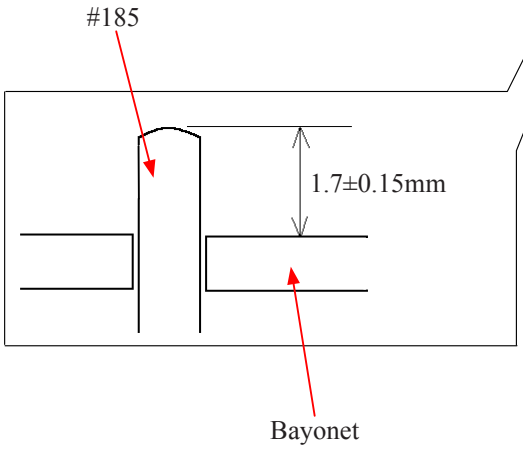

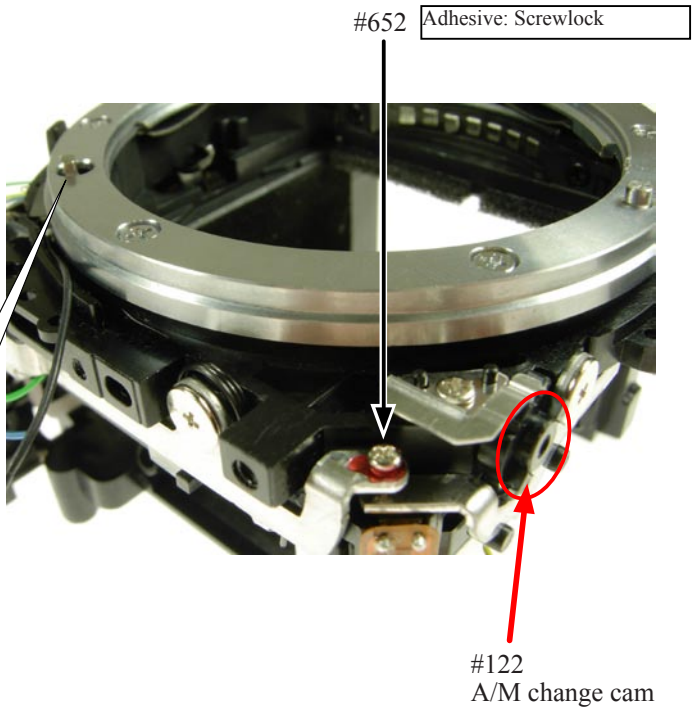

Height adjustment of Aperture lever

・Measure the height of the aperture lever with the tool (J18004).
In case the result does not meet the standard, bend the red circled area for adjustment.
Be careful NOT to bend the inside of the lever.

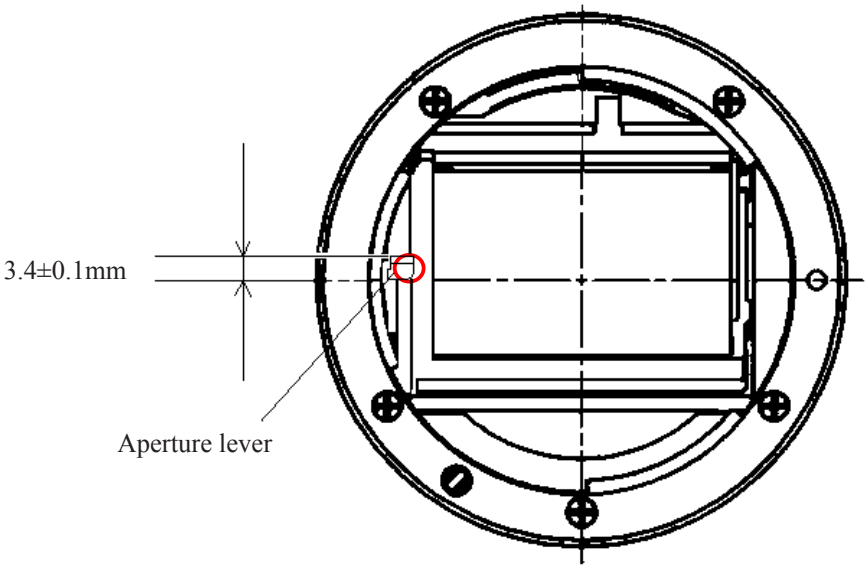

Angle inspection and adjustment of Main mirror and Sub-mirror

Device:

1. Main-mirror 45°-deg. angle inspection and adjustment

① Collimator (J19110)
② Reflection mirror (J18389)
③ Optical parallel (J18037-2)
④ Hexagonal key

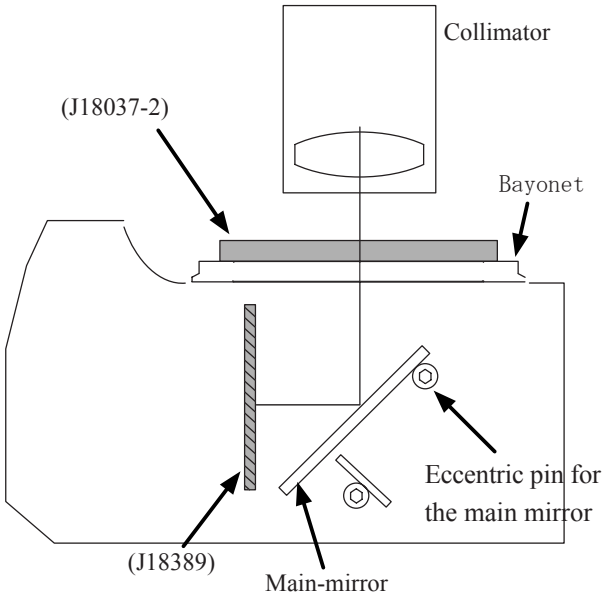

2. Sub-mirror 59°-deg. angle inspection and adjustment

① Collimator (J19110)
② Sub-mirror 59° angle tool (J18409)
③ Hexagonal key

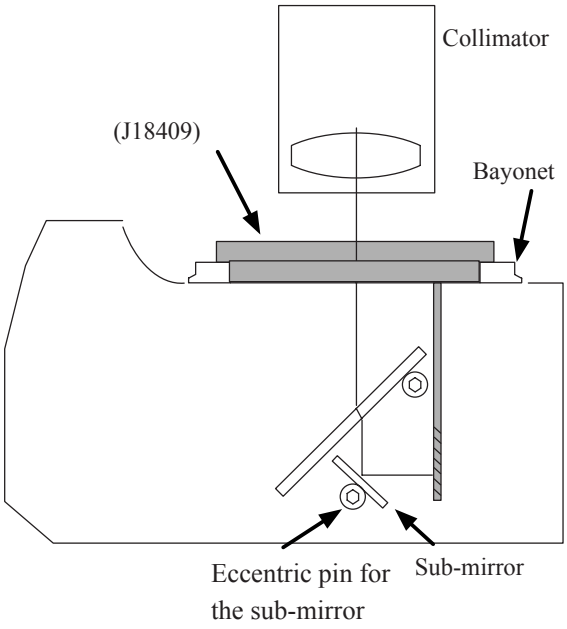

Standard:

	Main mirror	Sub-mirror
Left-right deviation	±10’	——
Up-down deviation	±5’	±10’
Distortion	6’or less	6’or less

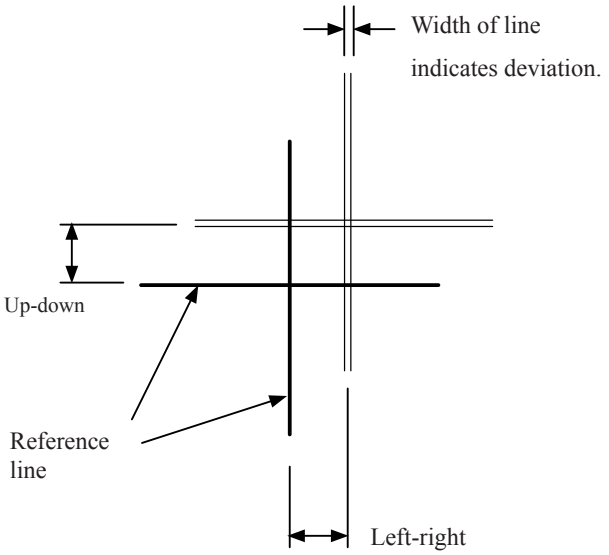

Caution:

- Before and after the adjustment, check the accuracy by moving the main mirror up- and downwards a few times.
- Check for the up-down deviation. In case the result is out of standard, make the adjustment by turning the eccentric pin with Hexagonal wrench.
- In case up-down/left-right deviation is out of standard, the defects in front plate unit or mirror unit are possible.
- If the inspection & adjustment were made only for the front body, assemble it into the rear body and make the inspection & adjustment again.

Angle adjustment of Main mirror and sub-mirror

※ Procedure: Follow the operating instructions of the tool for main/sub mirror angle-inspection (J19132).

・Main-mirror 45° adjustment

Caution: Before and after the adjustment, check the accuracy by moving the main mirror up- and downwards a few times.

① Check for the right-left deviation

In case the result is out of standard, loose ~~the three screws (#1520)~~ the four screws (#670) △（Revision）, then make the adjustment by moving the eccentric pin for right-left adjustment.

② Check for the up-down deviation.

In case the result is out of standard, make the adjustment by turning the eccentric pin for the main mirror.

・Sub-mirror 59° adjustment

Caution: Before and after the adjustment, check the accuracy by moving the main mirror up- and downwards a few times. Confirm if the two-pronged part of the sub-mirror firmly fits in the eccentric pin.

＊ Check for the up-down deviation

In case the result is out of standard, make the adjustment by turning the sub-mirror eccentric pin.

① Mirror angle-inspection tool

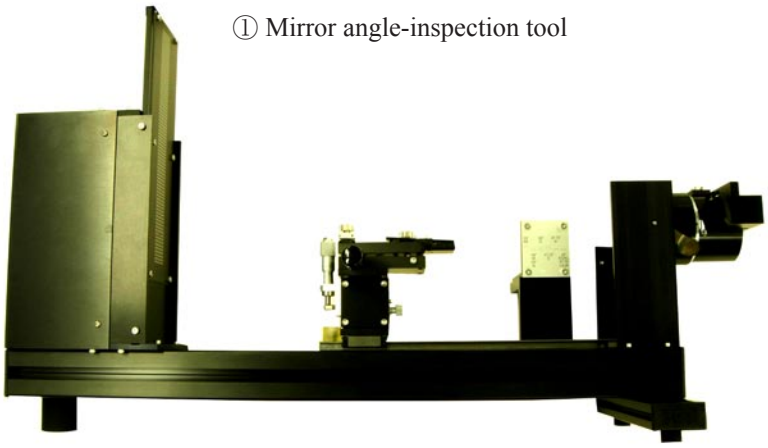

Caution: Do NOT release the shutter.

Set the (supplied) tilted mirror with the main mirror being slightly lifted so that the sub-mirror of D90 does not touch the (supplied) tilted mirror of the inspection tool.

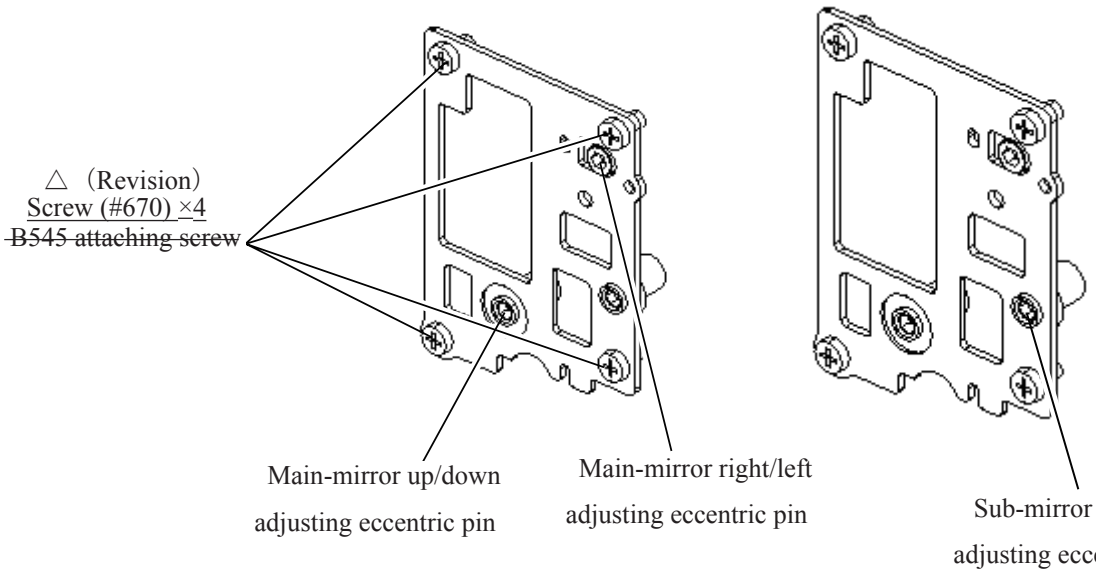

サービス計画課 M

2. Prism box

Eyepiece barrel unit

- Mount the eyepiece lens 1 (#5) and eyepiece lens 3 (#7).
- Mount the eyepiece barrel unit (#B271) on the penta prism box unit (#B261RP) by fitting with the boss.
- Tighten the two screws (#642).
- Attach the tape (#783).

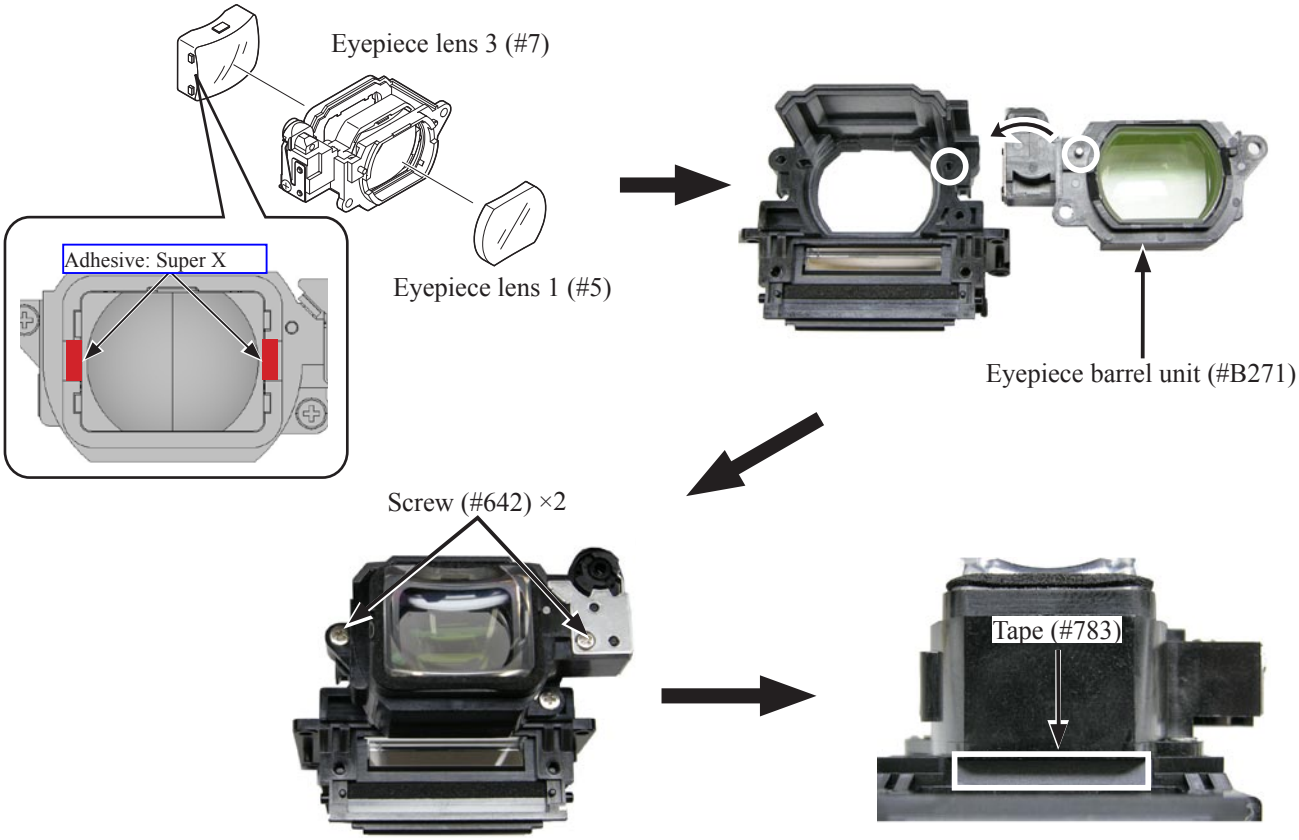

- Attach the double-stick tape (#504) to light guide (#503).
- Peel of the backing paper and attach the polarizing plate (#502).
- Fit the attached light guides (#503) into the groove.
- Attach the tape (#521).

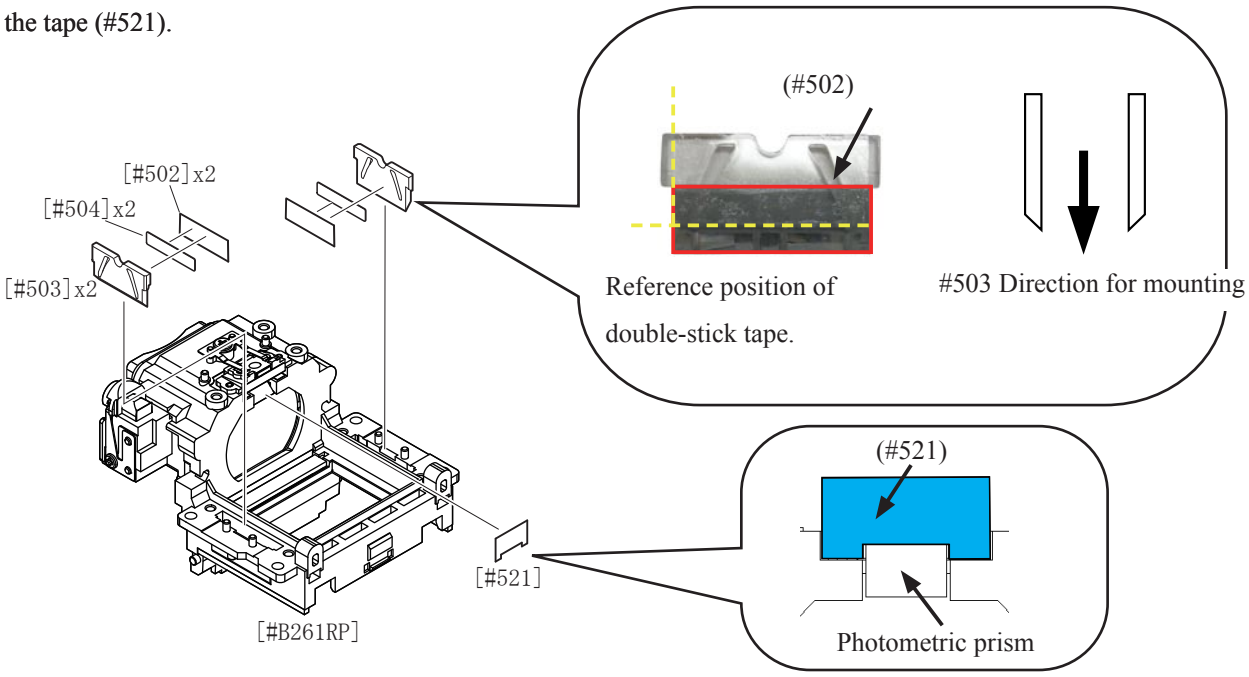

Penta prism FPC unit

・Mount the penta prism FPC unit (#B1021) and the two plates (#532) by fitting with the bosses.
(Be careful of the mounting direction of [#532].)

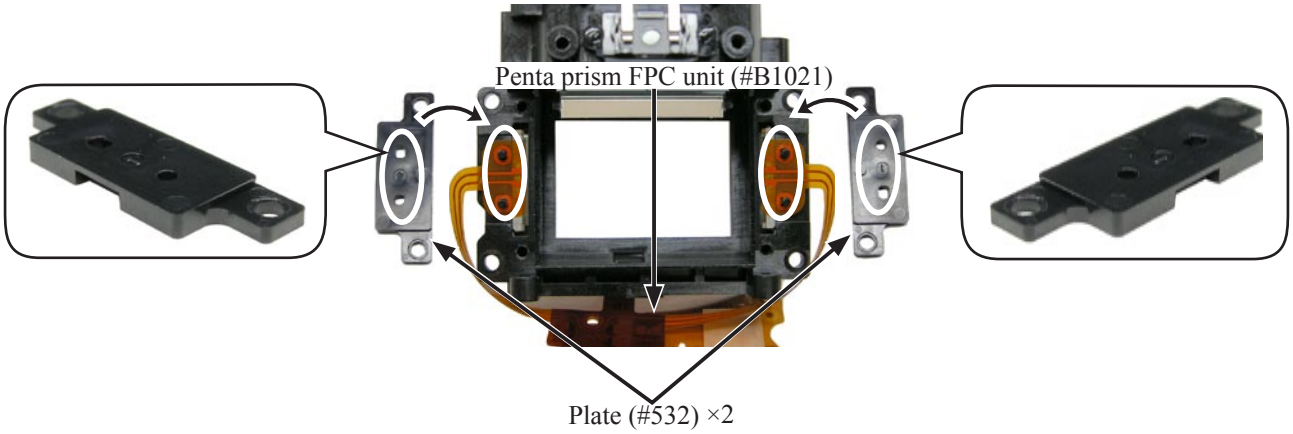

・Tighten the four screws (#635).

Penta prism

・Attach the spacer (#535).

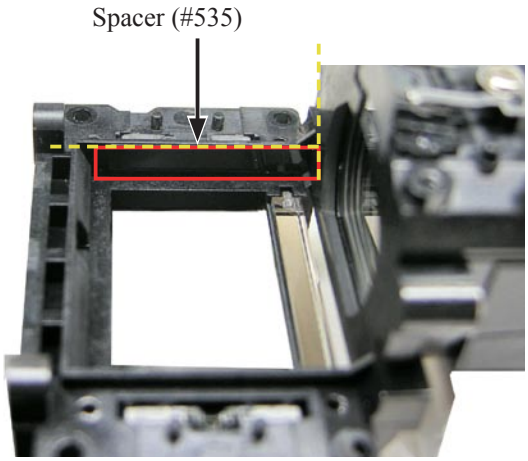

・Mount the view field frame 2 (#264) and the penta prism (#4).

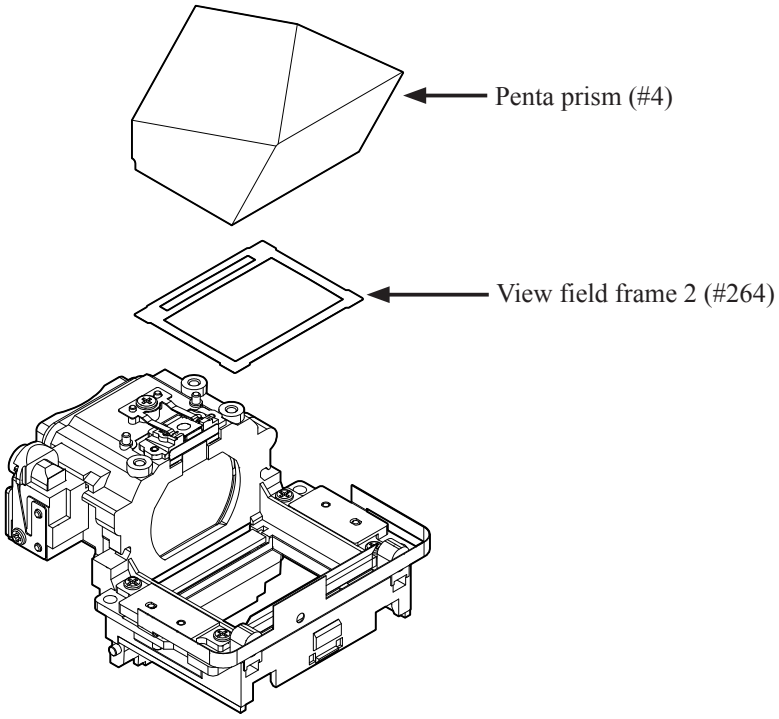

・Mount the protection sheet (#269) and the penta prism retainer (#267).

・Attach the double-stick tape (#780) to the penta prism retainer (#267).

・Hook and attach the insulation sheet (#270) to the penta prism retainer (#267).

(Be careful of the attaching direction of [#270].)

・Attach the double-stick tape (#781).

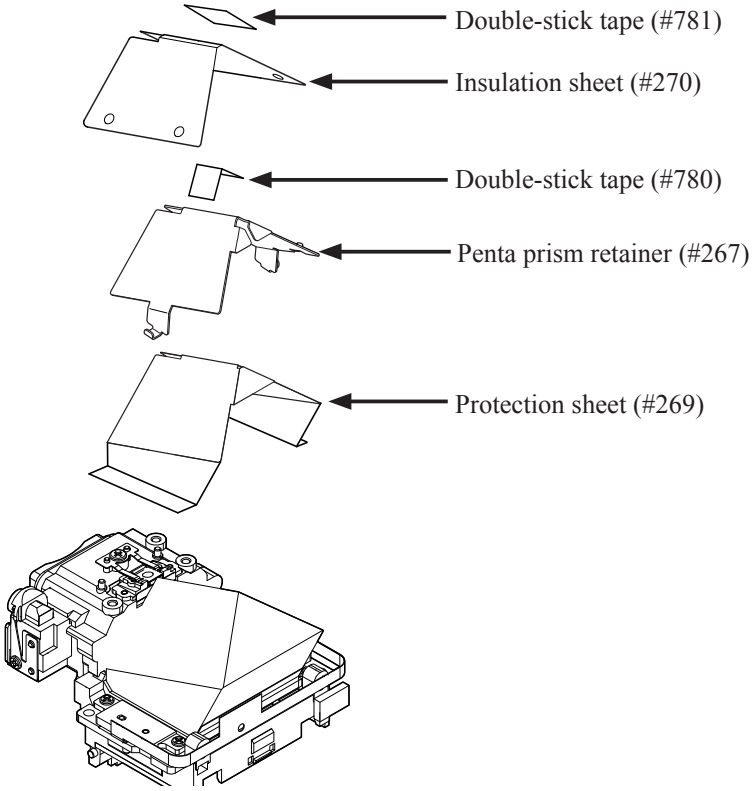

・Hook the two springs (#268) in numeric order (①→②→③).

・Attach the dust prevent sheet (#298).

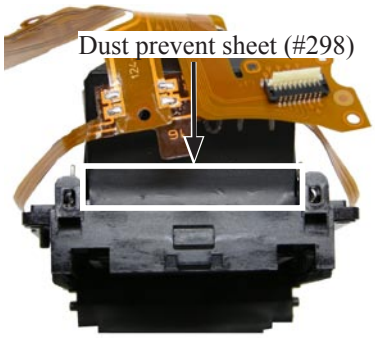

・Adhere the double-stick tape (#781).

・Attach the penta prism FPC unit (#B1021) by fitting with the bosses.

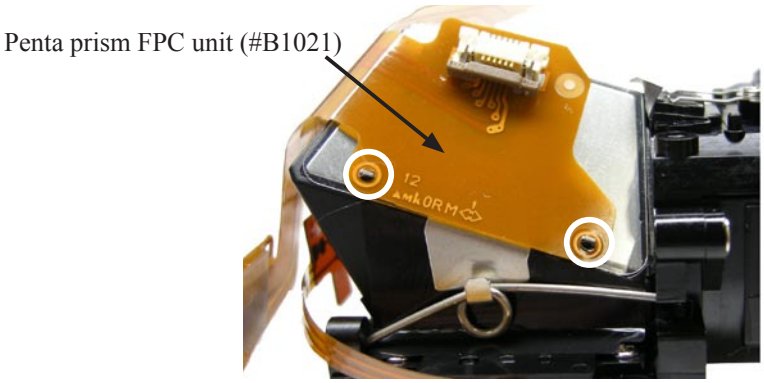

Screen box

- Mount the superimpose unit (#B1046) on the screen box (#510).
- Mount the view field frame 1 (#263) by fitting its edge under the FPC of the SI unit (#B1046).
- Position the SI unit (#B1046) and the view field frame 1 (#263) in the direction of the arrows, and mount them.
- Hook the retainer spring (#534) by fitting with the bosses.

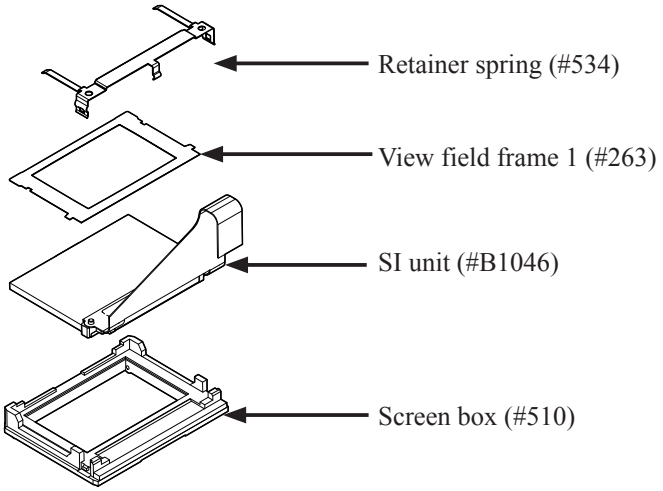

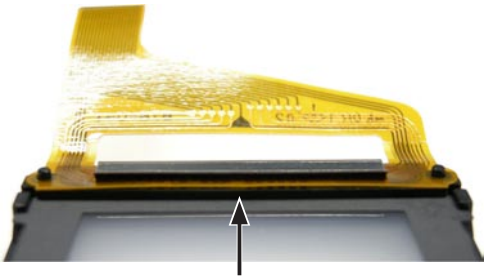

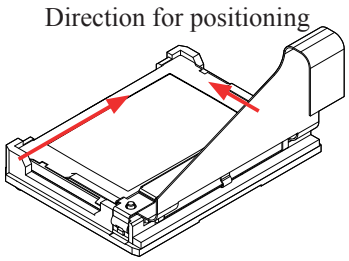

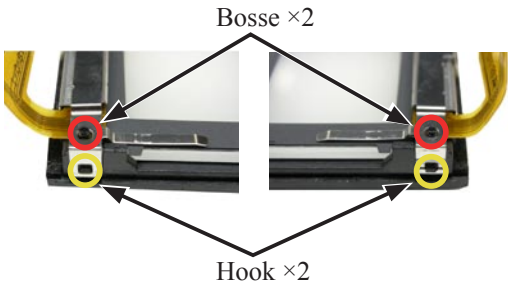

- Attach the sponge (#527).
- Attach the washer (#266) and fresnel lens (#3) to screen box (#510)
- Hook the spring (#265) to the screen box (#510).

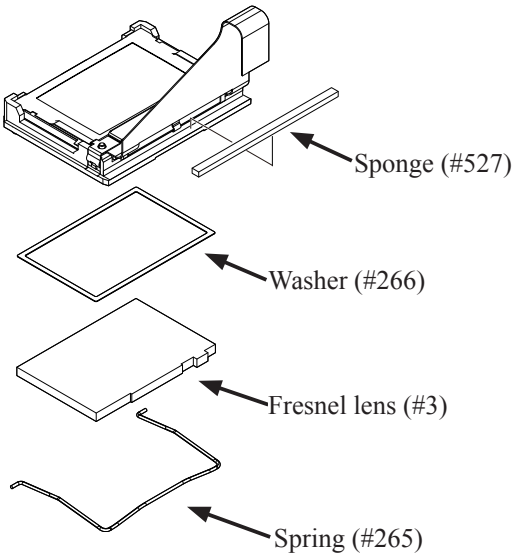

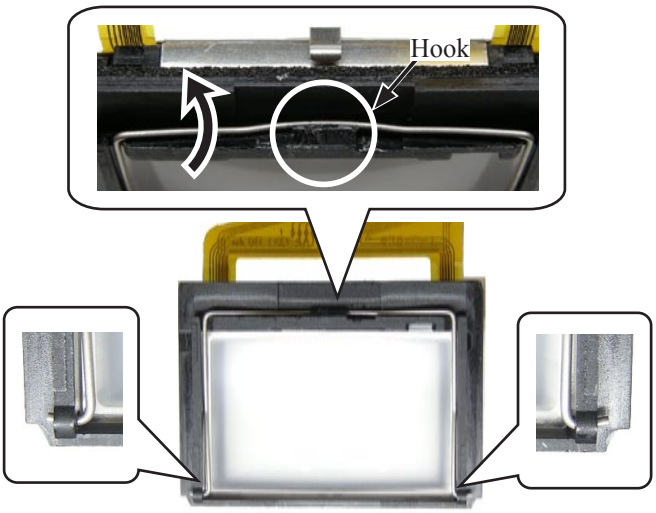

・Mount the screen box assembly.

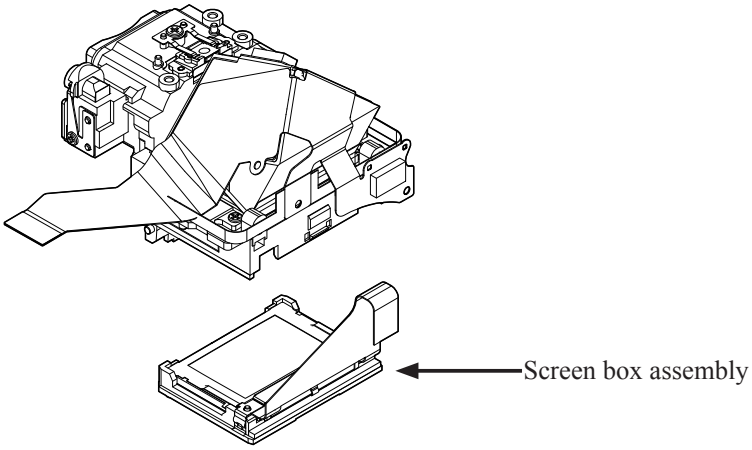

・Attach the screen box plate (#511) by fitting with bosses, and engage the hook of the penta prism box.

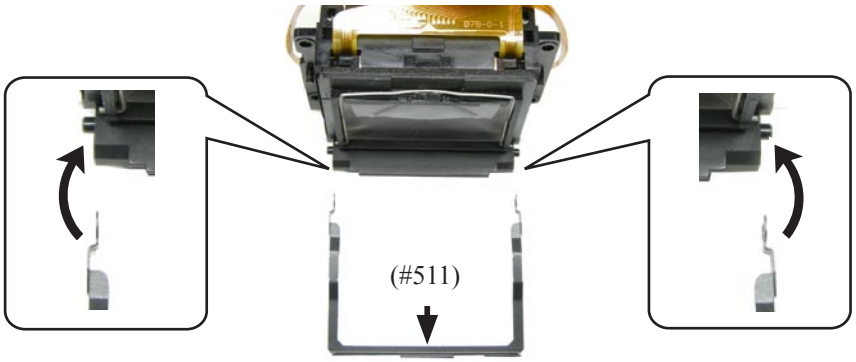

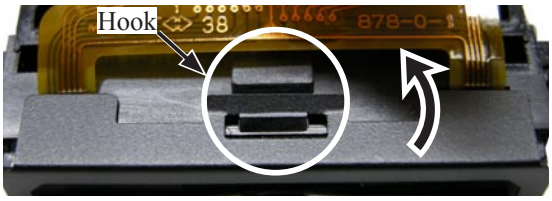

・Connect the FPC of the SI unit (#B1046) to the connector on the penta prism FPC unit (#B1021).

・Attach the tape [TA0009 (7×5)].

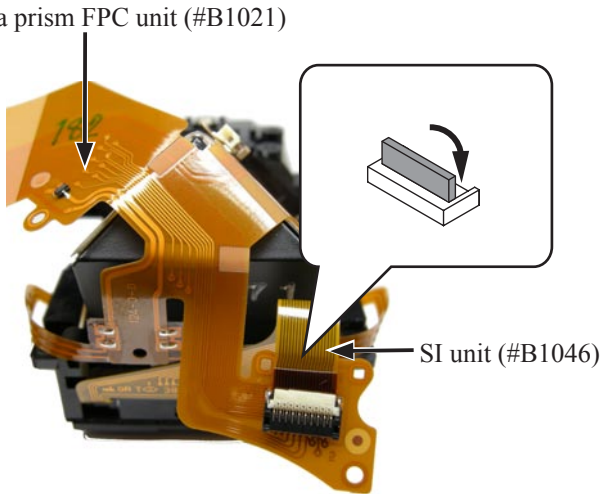

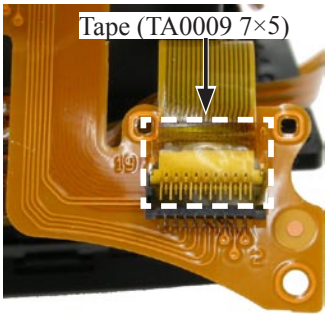

Inside finder LCD unit

・Mount the inside finder LCD unit (#B1010), and tighten the two screws (#708).

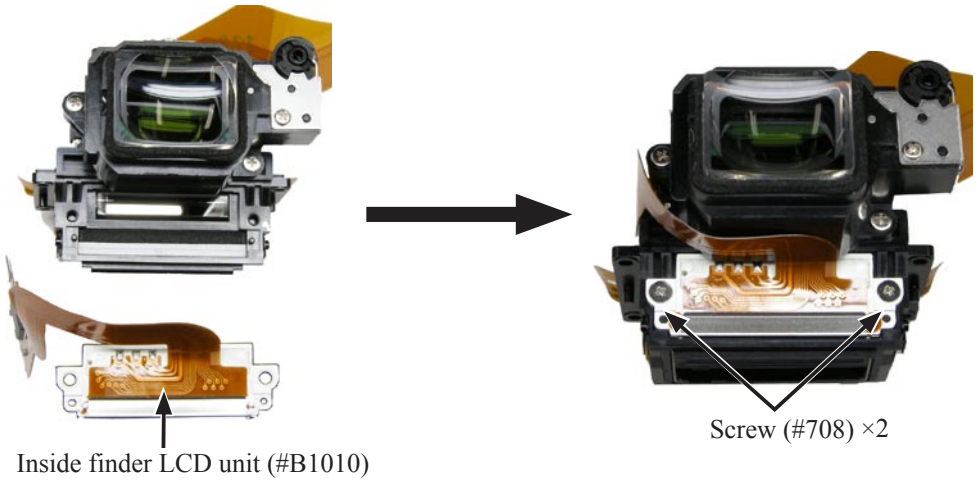

・Connect the FPC of the inside finder LCD unit (#B1010) to the connector on the penta prism FPC unit (#B1021).

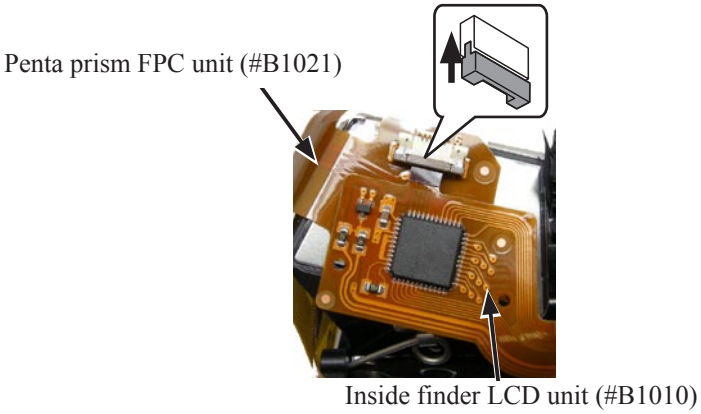

Metering FPC unit 1

・Mount the metering FPC unit (#B11008), and tighten the three screws (#607).

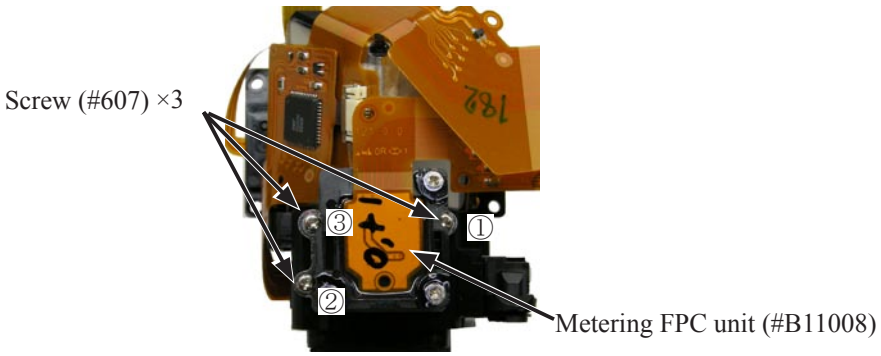

・Attach the penta prism box unit (B261RP) with the four screws (#642).

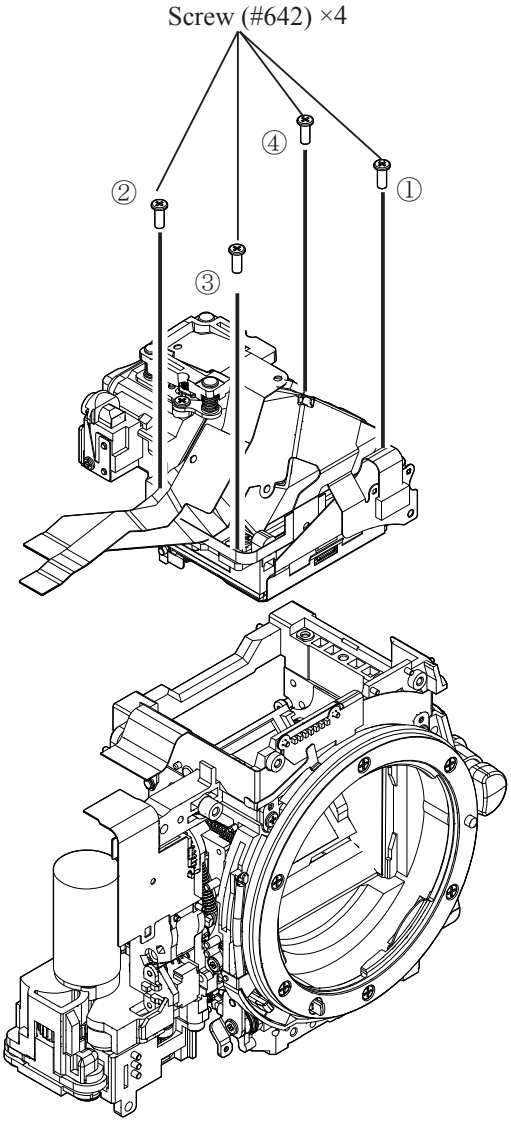

3. Rear body

Dust-proof tape

・Attach the tapes {[TA0026 (8×50)], #733, and #734)} based on the reference position.

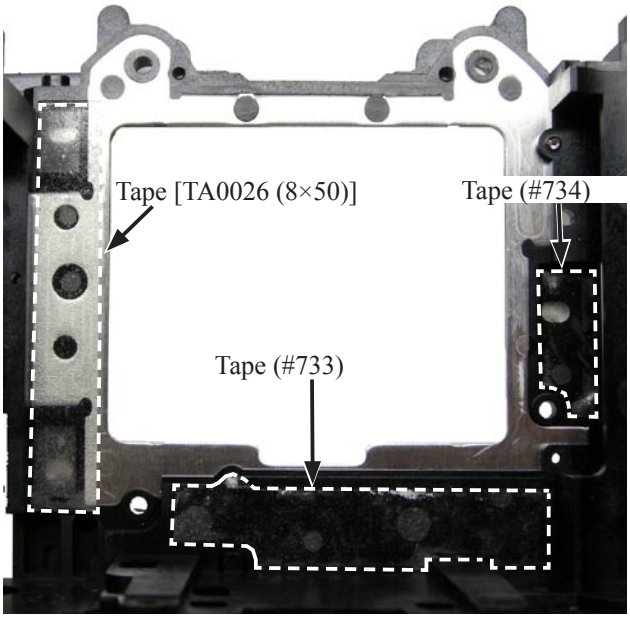

Drip-proof sponge

・Attach the sponge (#751).

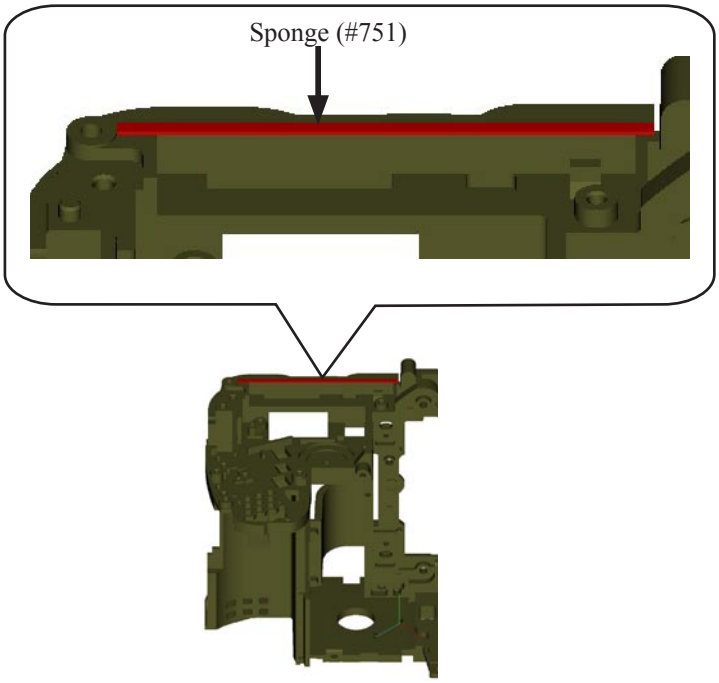

・Attach the two sponges (#753).

・Attach the sponge (#766).

・Attach the sponge (#761).

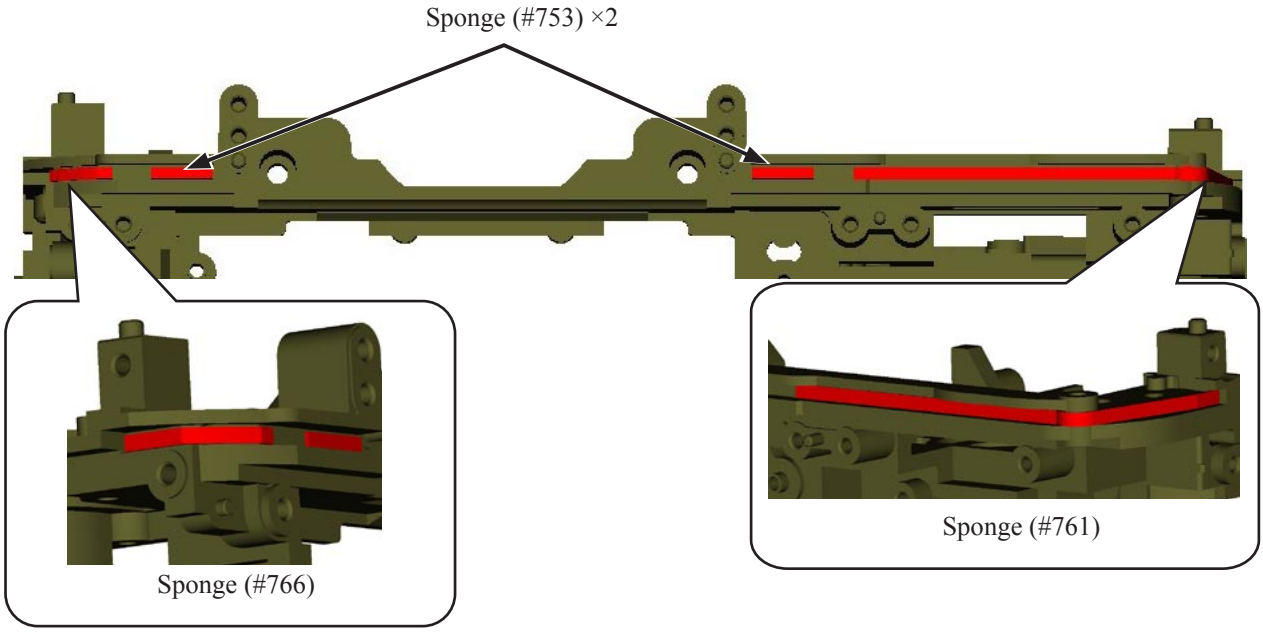

Buzzer unit

・Peel off the backing paper of the buzzer unit (#1055), and attach [#1055].

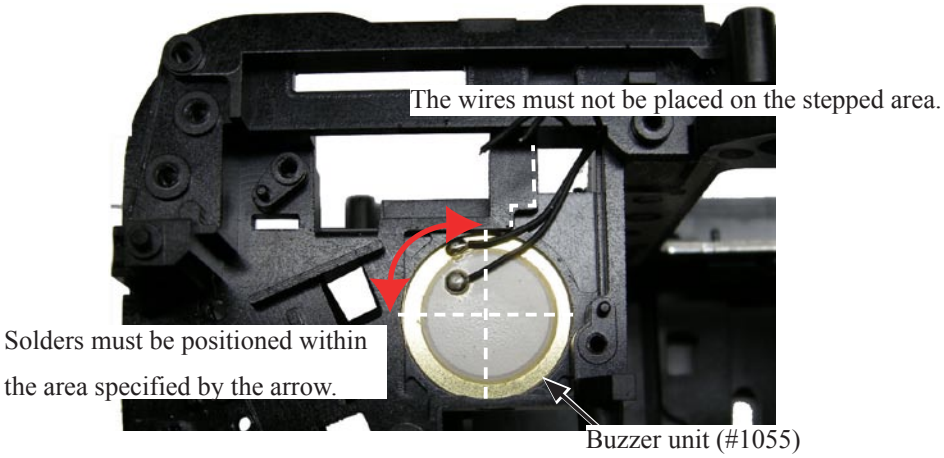

Eyelet

・Attach the sponge (#762) to eyelet (#145).

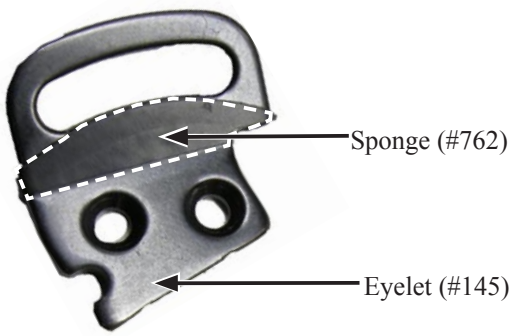

・Mount the GND plate (#149).

・Mount the eyelet (#145), and tighten the two screws (#614).

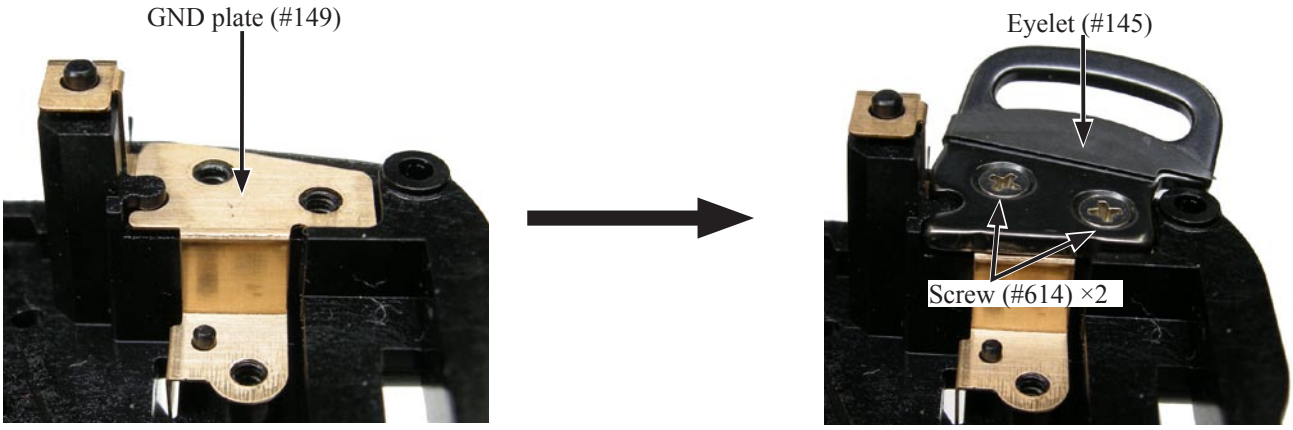

・Mount the GND plate (#150).

・Attach the sponges (#760 and #763).

・Mount the eyelet (#146).

・Tighten the two screws (#614).

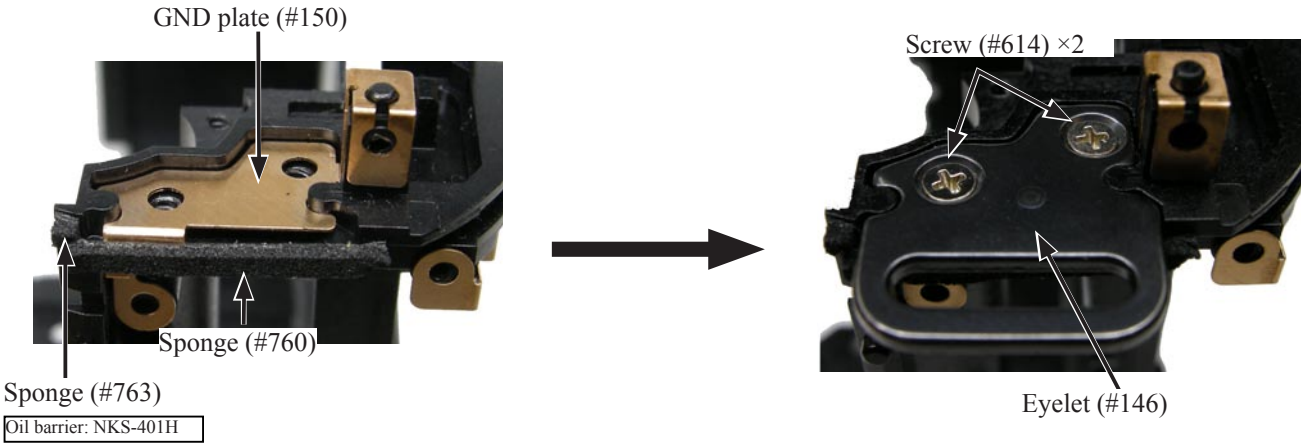

・Attach the GND plate (#106) by fitting with the boss.

・Tighten the screw (#683).

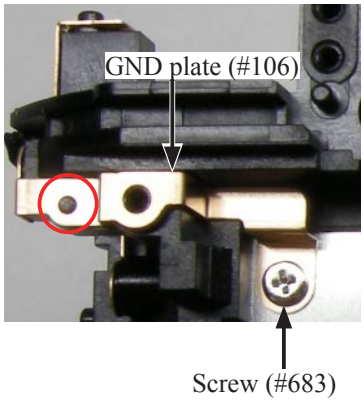

・Arrange the wires (Orange/Black/Red) among the bosses as below.

・Mount the GND plate (#107) by fitting with the bosses.

・Mount the GND plate (#143) by fitting with the bosses.

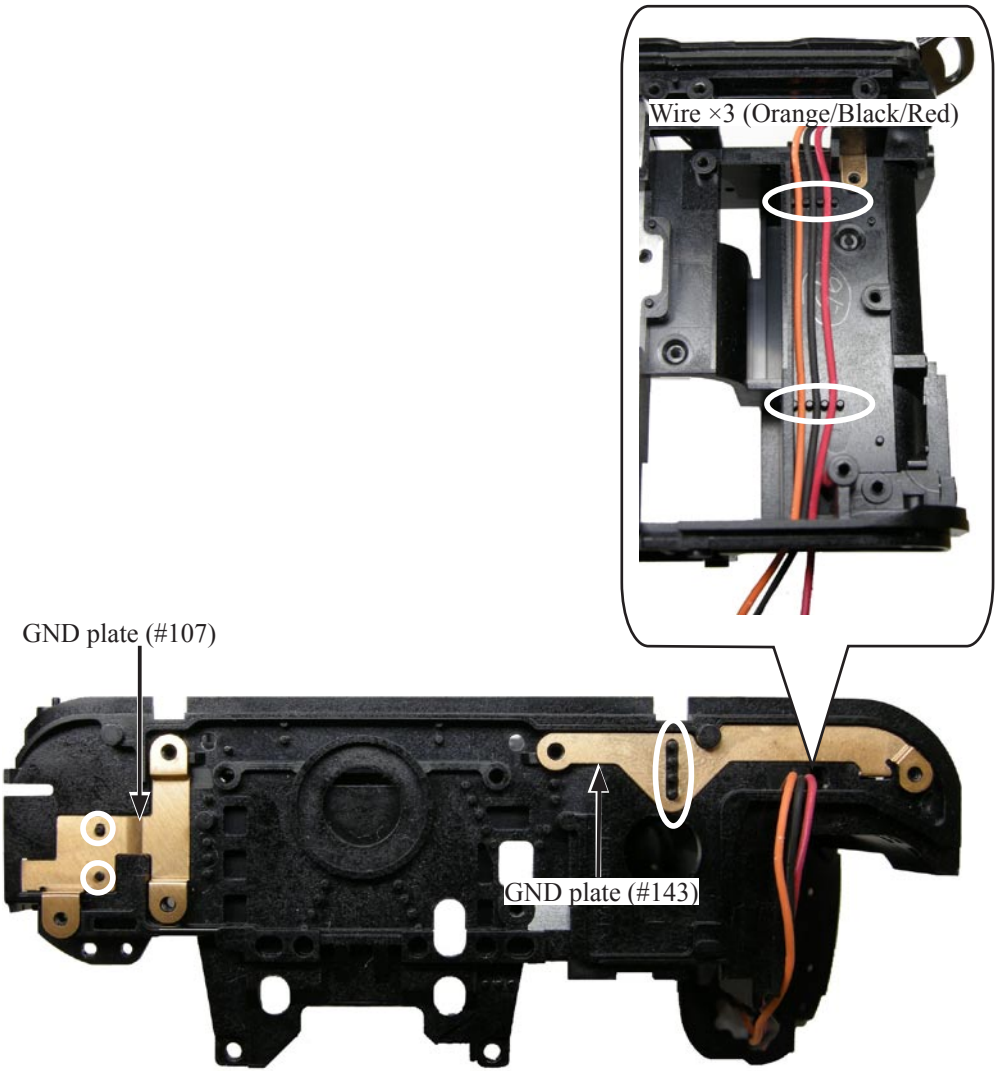

・Arrange the wires (back-side) (Orange/Black/Red) as below.

・Arrange the wires (bayonet-side) (Red/Black) as below.

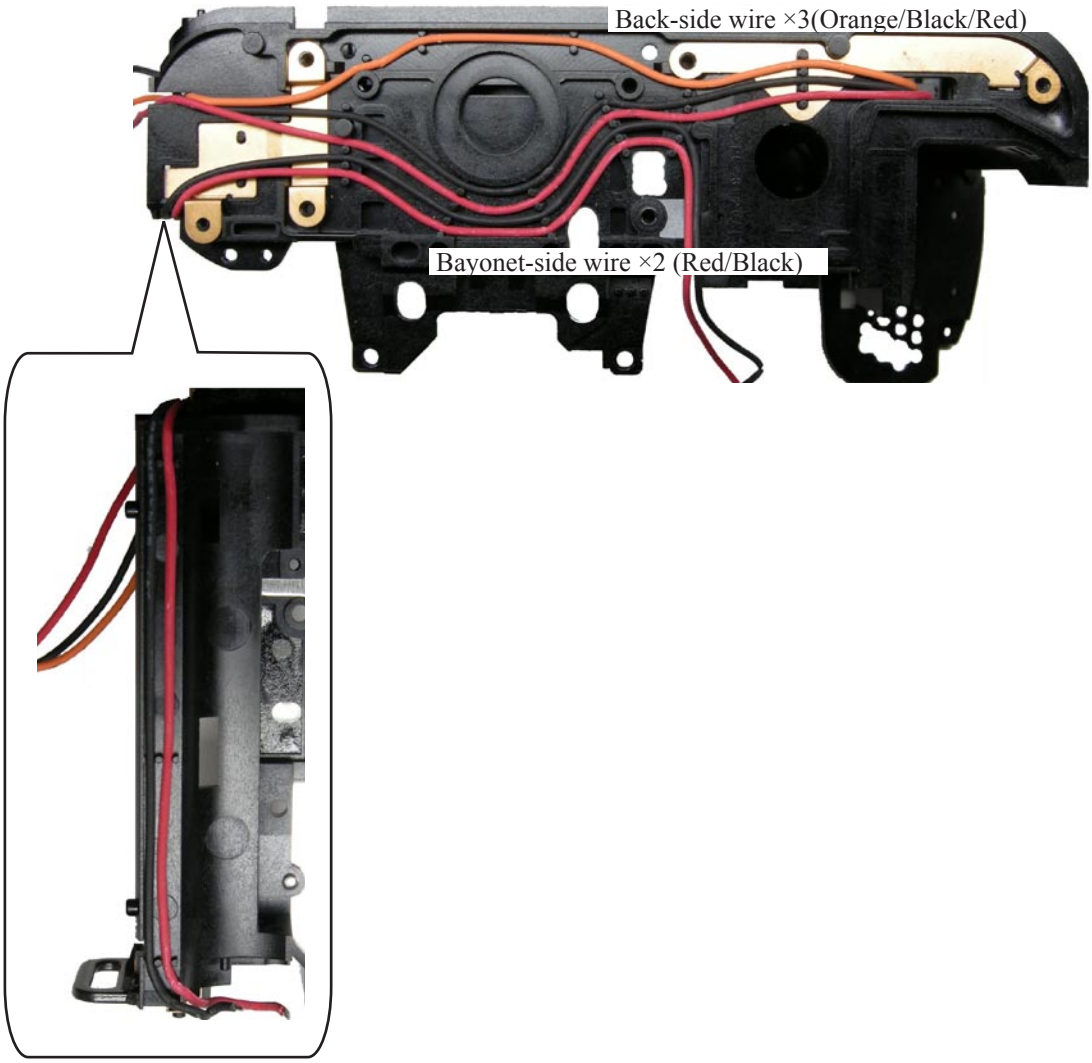

Battery contact spring

・Mount the FG/ID contact spring (#80) and the two battery contact spring (#157) by fitting with the bosses.

・Tighten the three screws (#619).

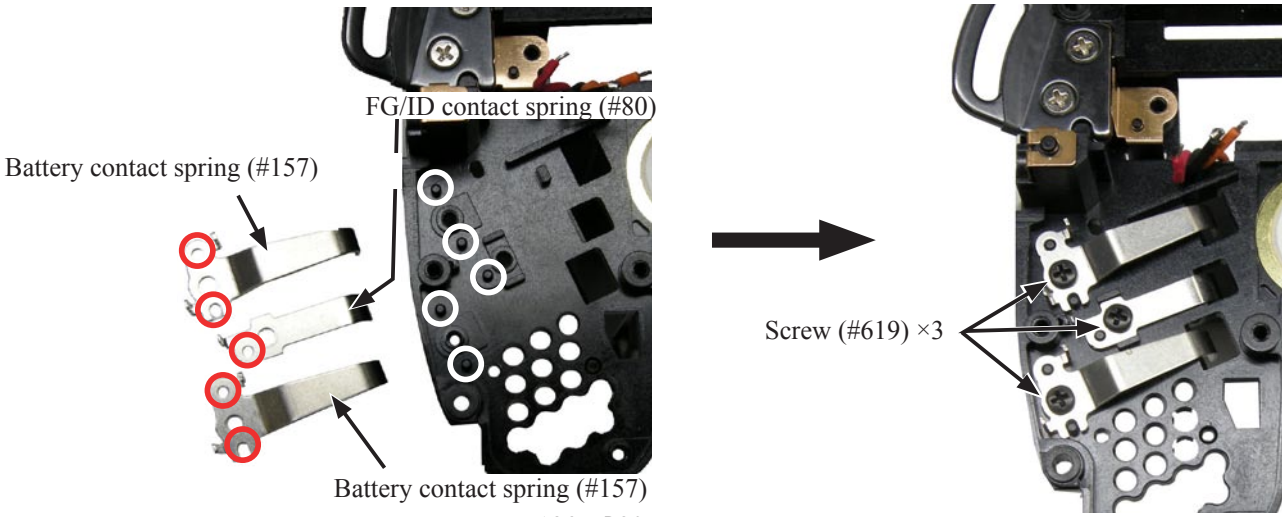

Power drive PCB unit

・Mount the GND plate (#142) by fitting with the bosses.

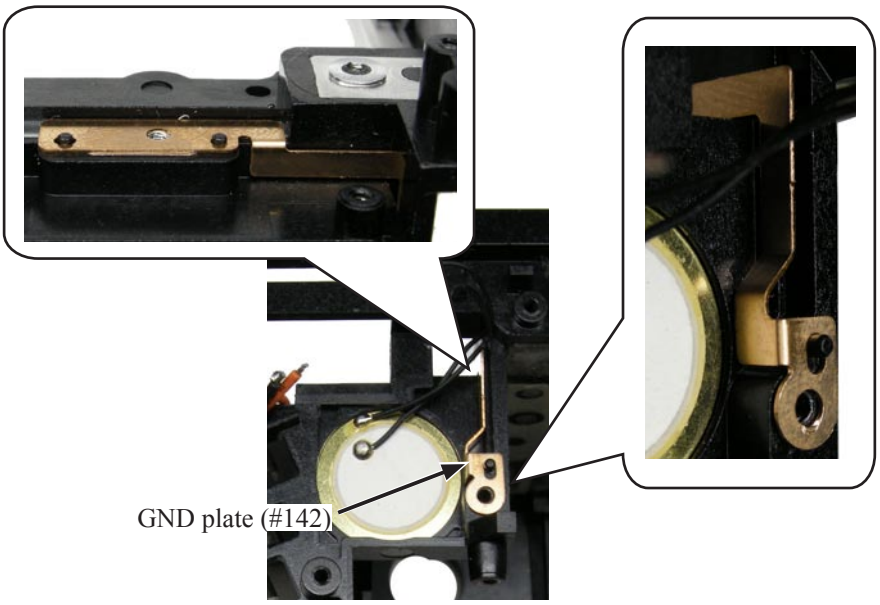

・Mount the power drive PCB (#B1002) by fitting with the bosses. (Be careful not to pinch the wires.)

・Tighten the two screws (#683).

・Make the three solder bridges.

・Solder the wires (Red/Black/Orange).

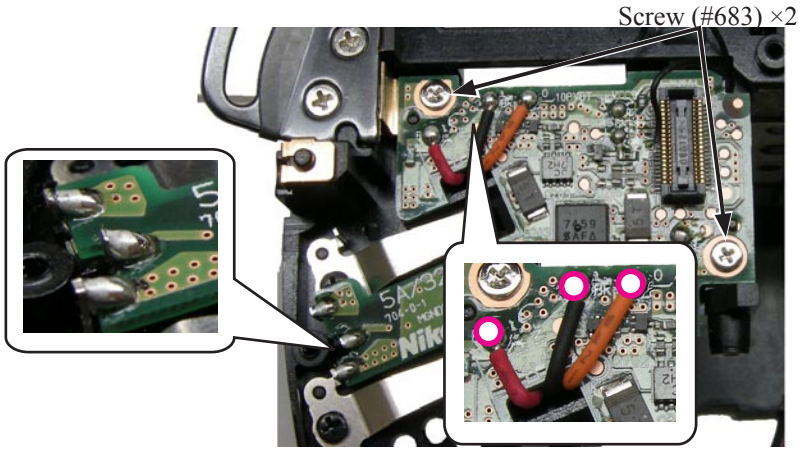

・Mount the OP FPC unit (#B1016), and tighten three screws [ROHS (#609)].

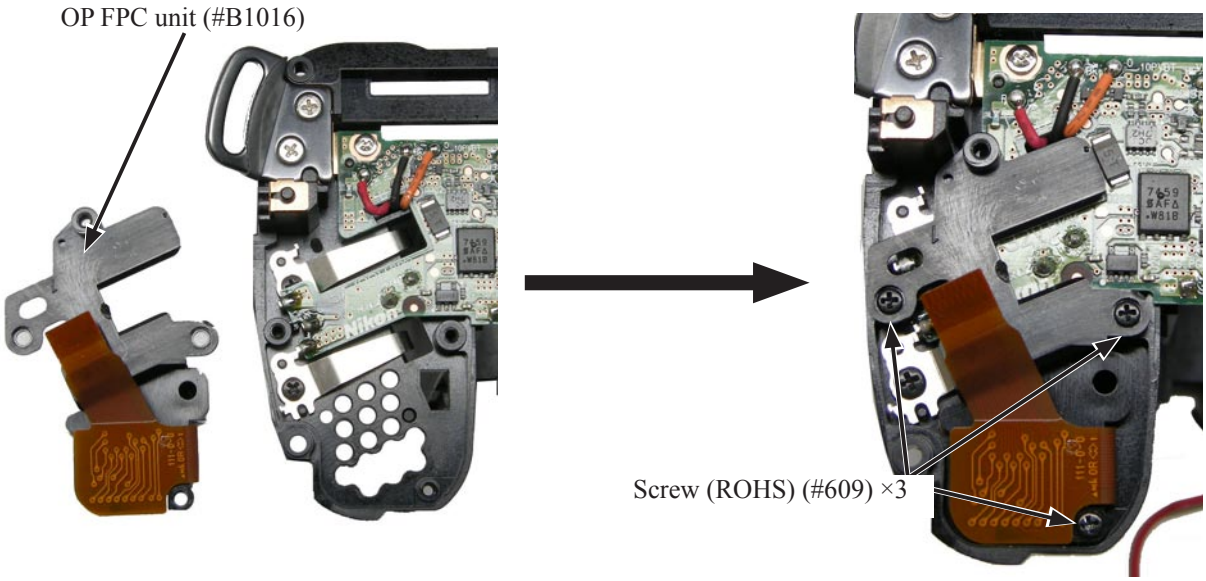

Bottom plate unit

・Attach the GND plate (#140) to the bottom plate unit (#B67).

・Tighten the two screws (#617).

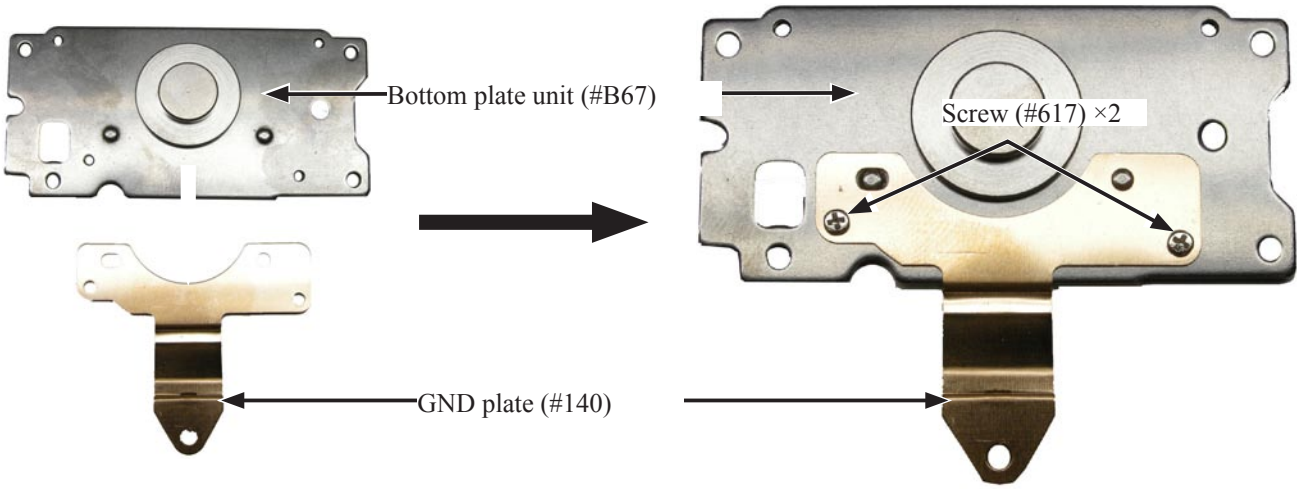

・Attach the bottom plate unit (#B67) to the rear body, and engage the hook by fitting in the hole of the GND plate (#140).

・ Tighten the four screws (#706) in numeric order.

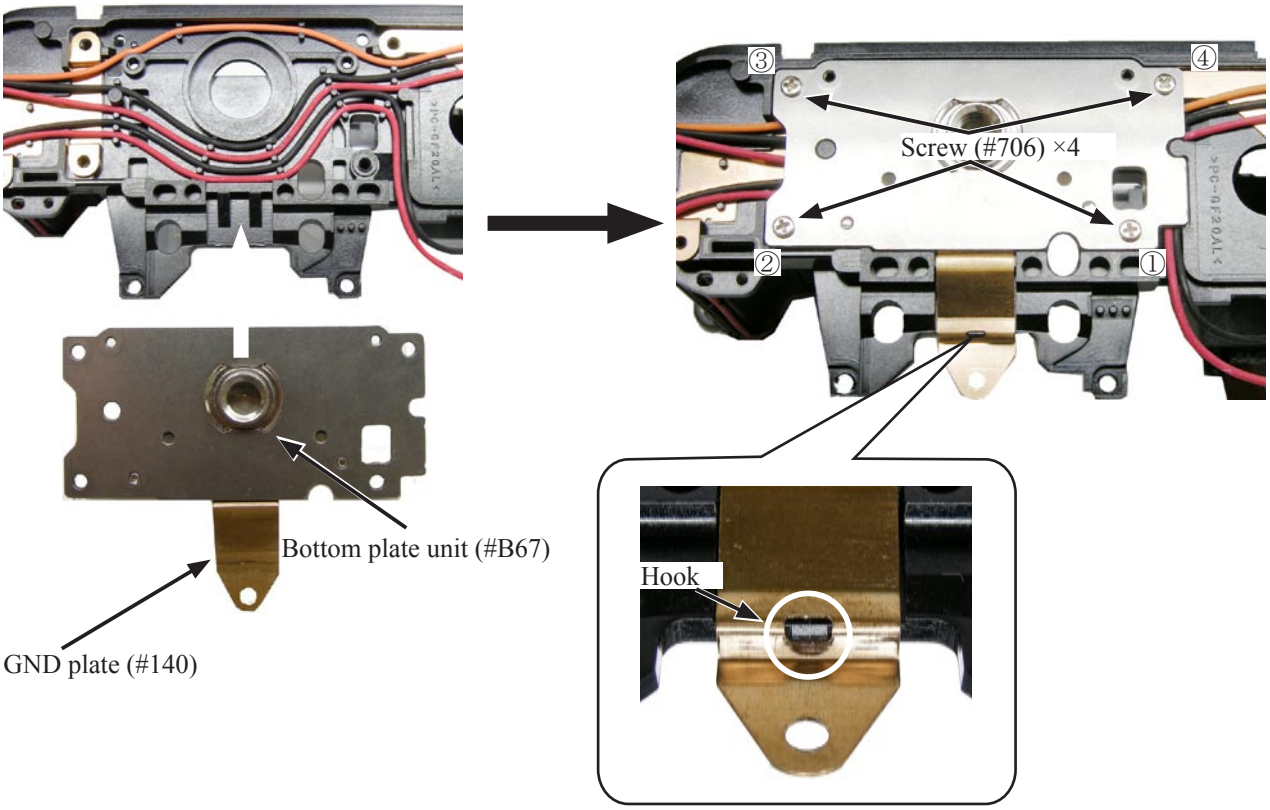

Imaging power PCB unit

・ Mount the GND plate (#B141) by fitting with the bosses.

・ Tighten the screw (#683).

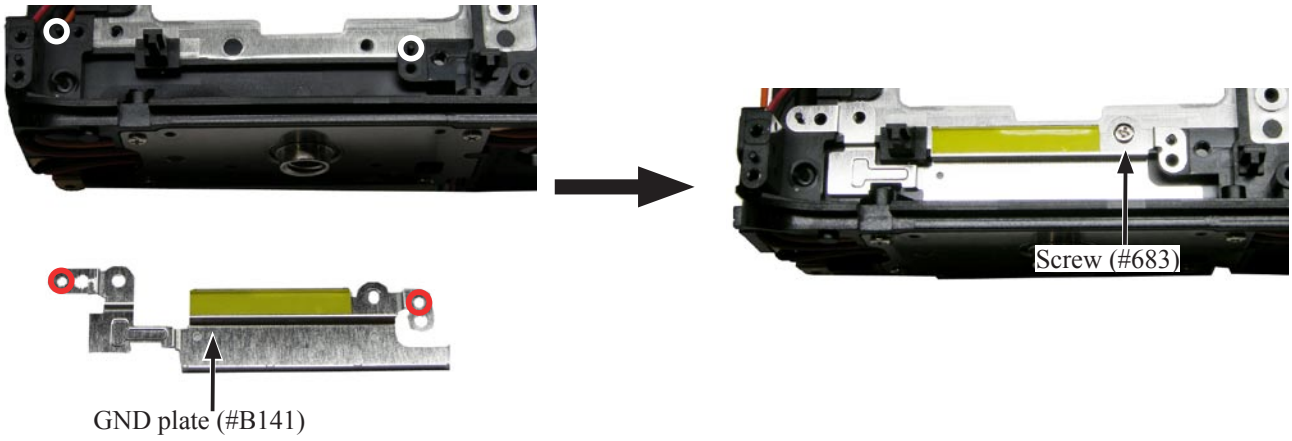

・Mount the imaging power PCB unit (#B1029) and the shield plate (#B108) by the fitting with the bosses.

・Tighten the three screws (#683).

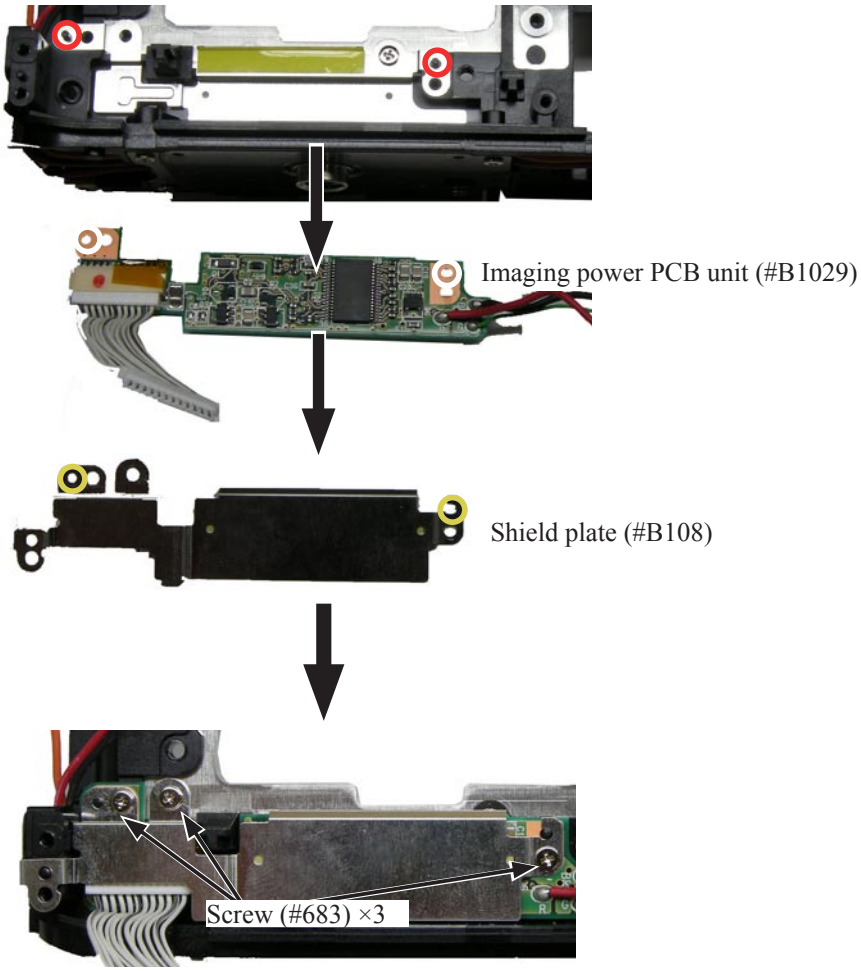

DC/DC PCB

・Mount the GND plate (#110) by fitting with the bosses.

・Hook the GND plate (#110), and tighten the two screws (#683).

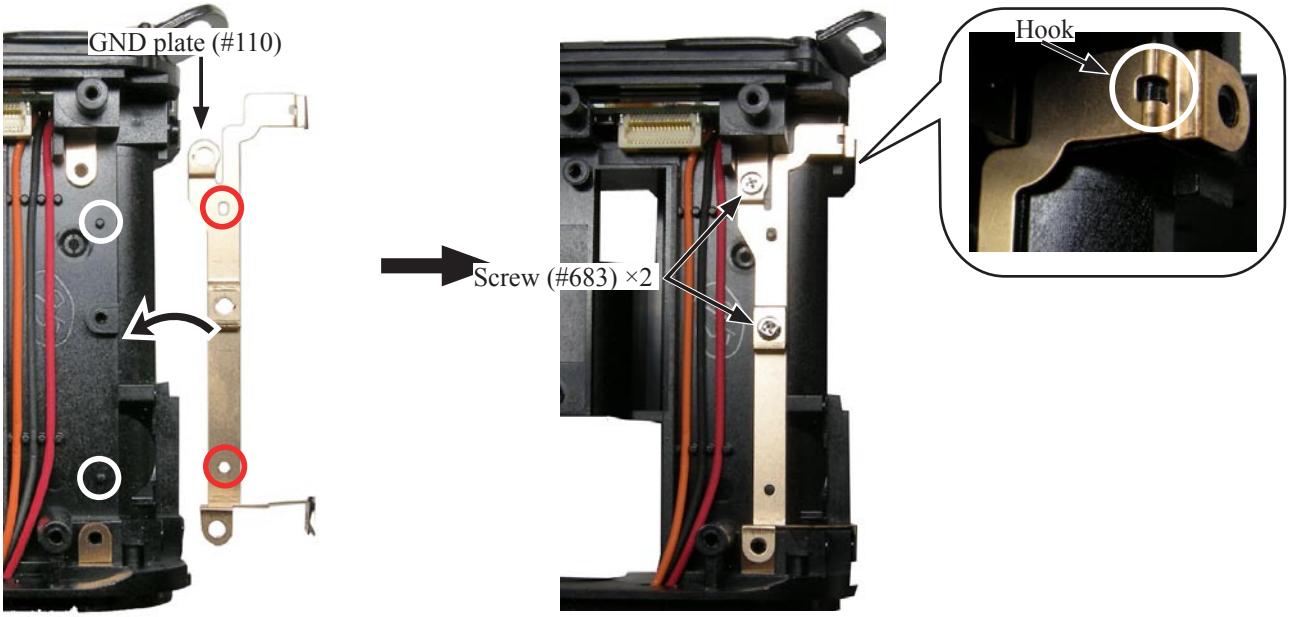

・Mount the DC/DC PCB (#B1030) by connecting its back to the connector.

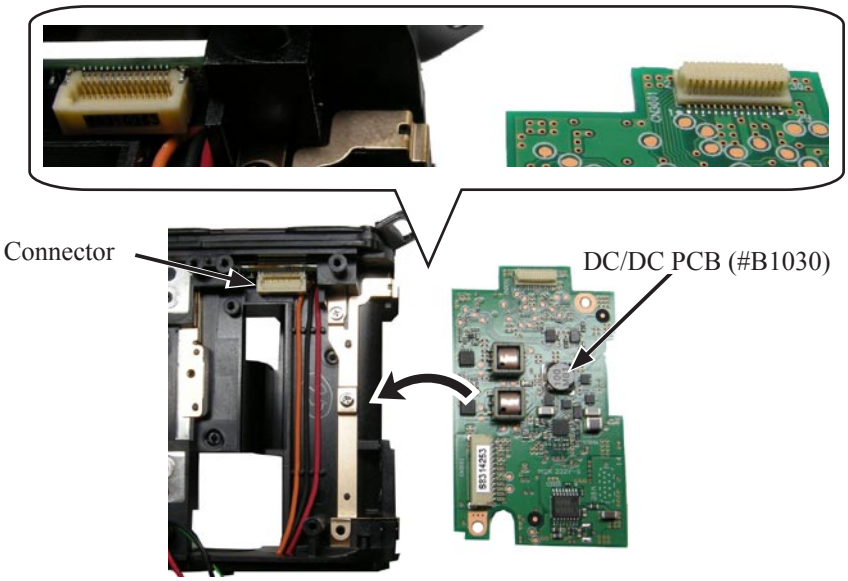

・Tighten the screw (#683).

・Solder the wires (Red/Black/Green).

・Arrange the wires so as not to be placed on the protruding portions.

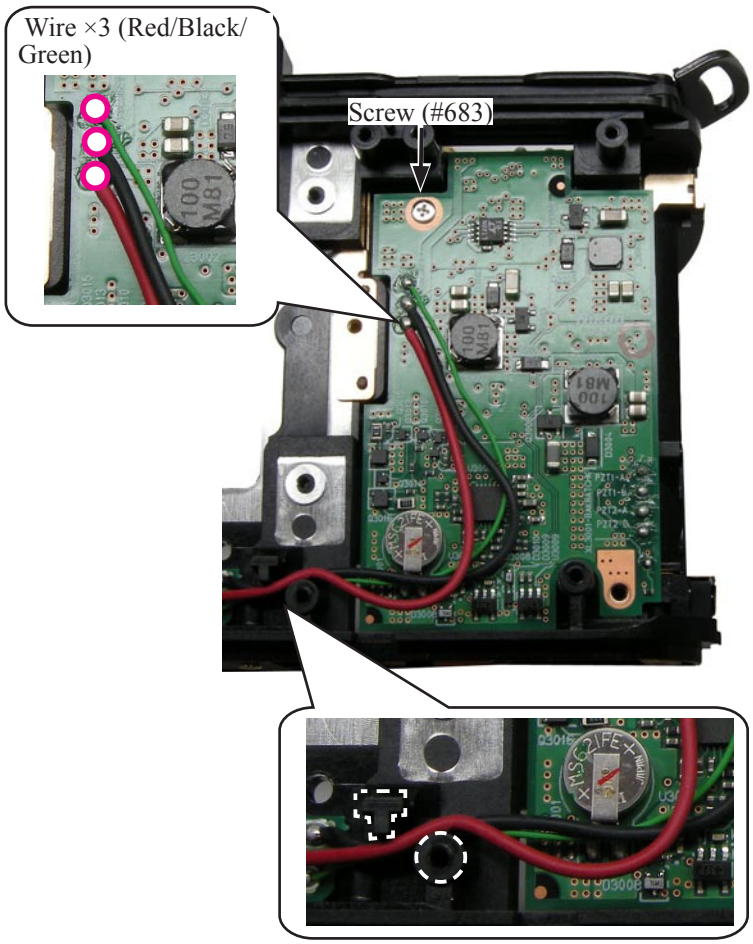

・Mount the GND plate unit (#B109) by fitting with the bosses.

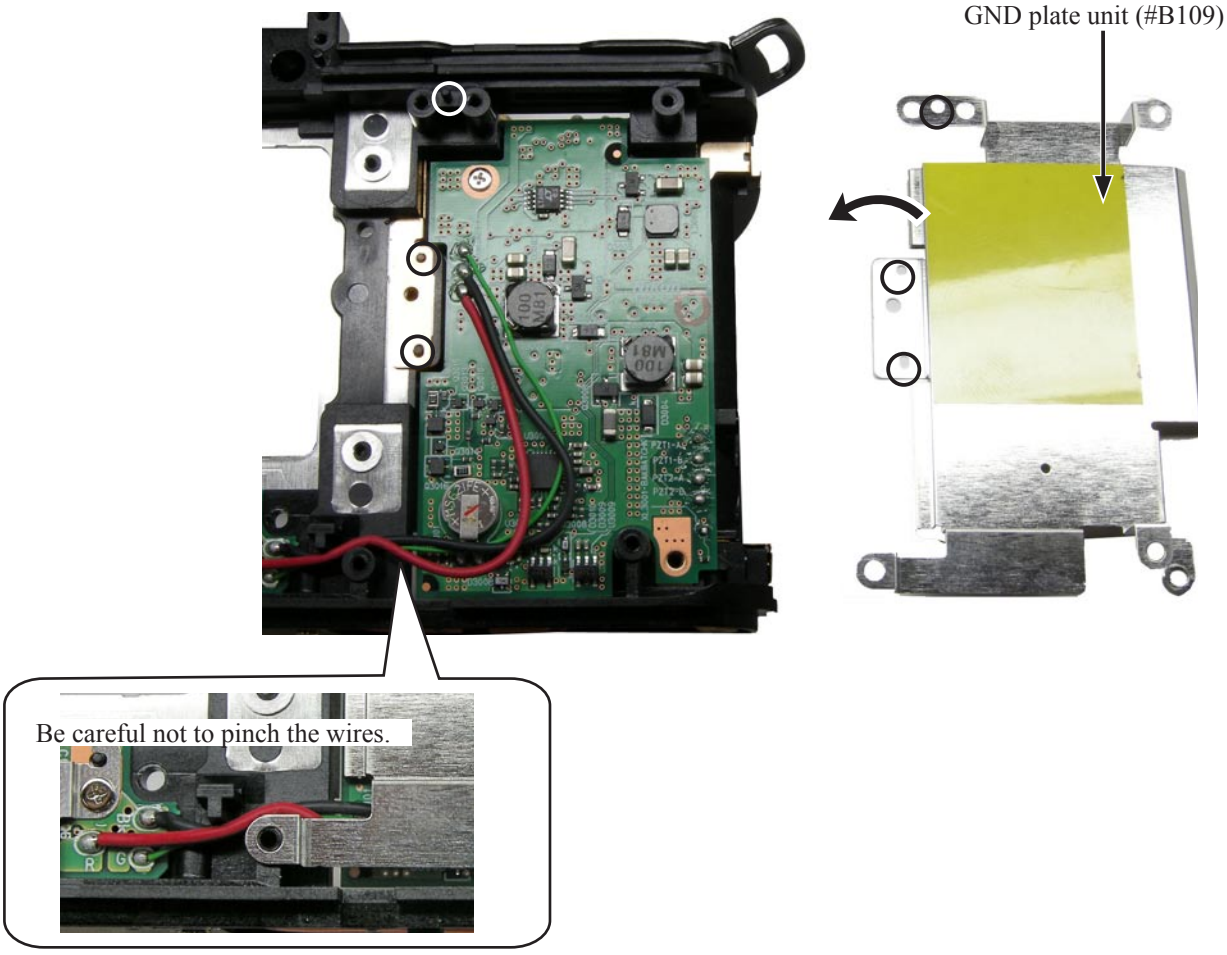

・Tighten the two screws (#683).

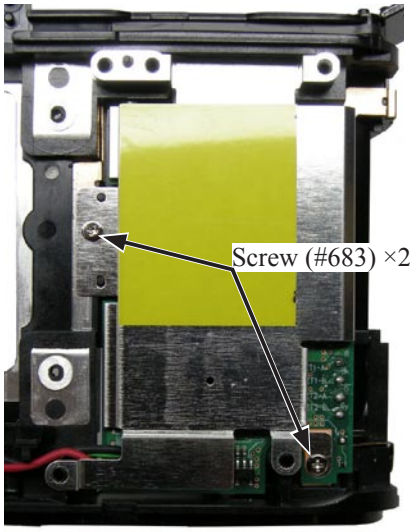

SB/IF PCB unit

・Attach the gasket (#77, #83, and #473) along the outside rim of each connector.

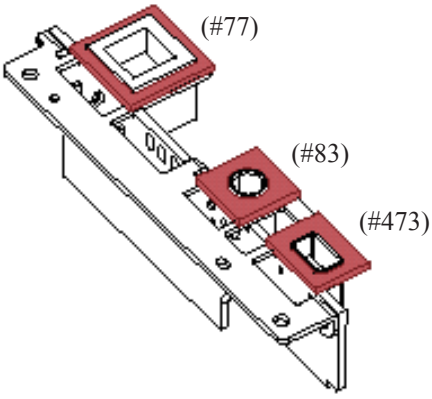

・Mount the SB/IF PCB unit (#B1041) by fitting with the bosses.
(The FPC must be placed over the coil as below.)

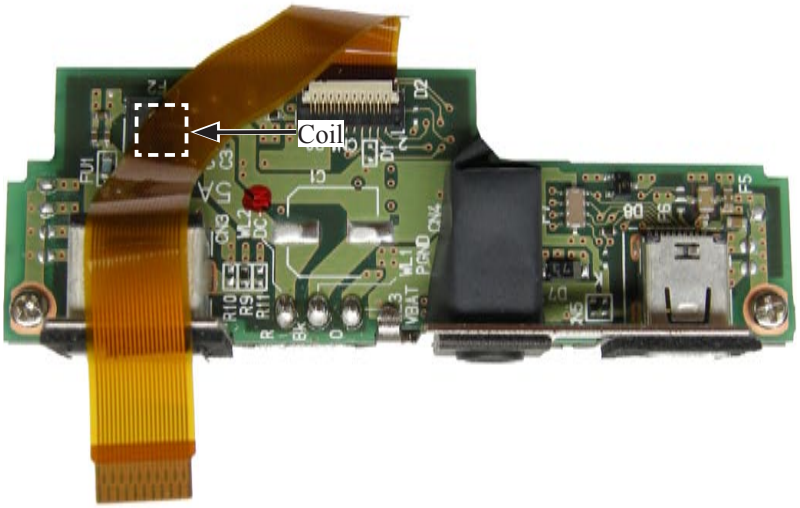

・Tighten the two screws (#612).
・Solder the wires (Red/Black/Orange).

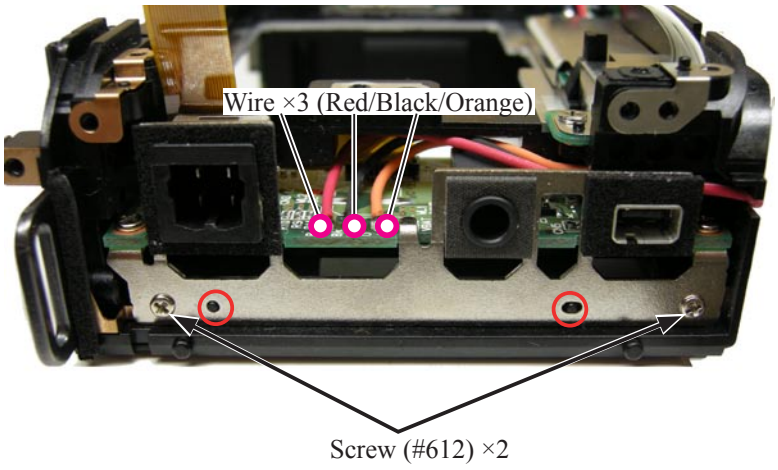

4 .Mounting Front body on Rear body.

- Peel off the backing paper of the dust-proof tape of the rear body.
- Mount the front body on the rear body.
- Tighten the two screws (#615), the four screws (#706) and the two screws (#702) in each numeric order.

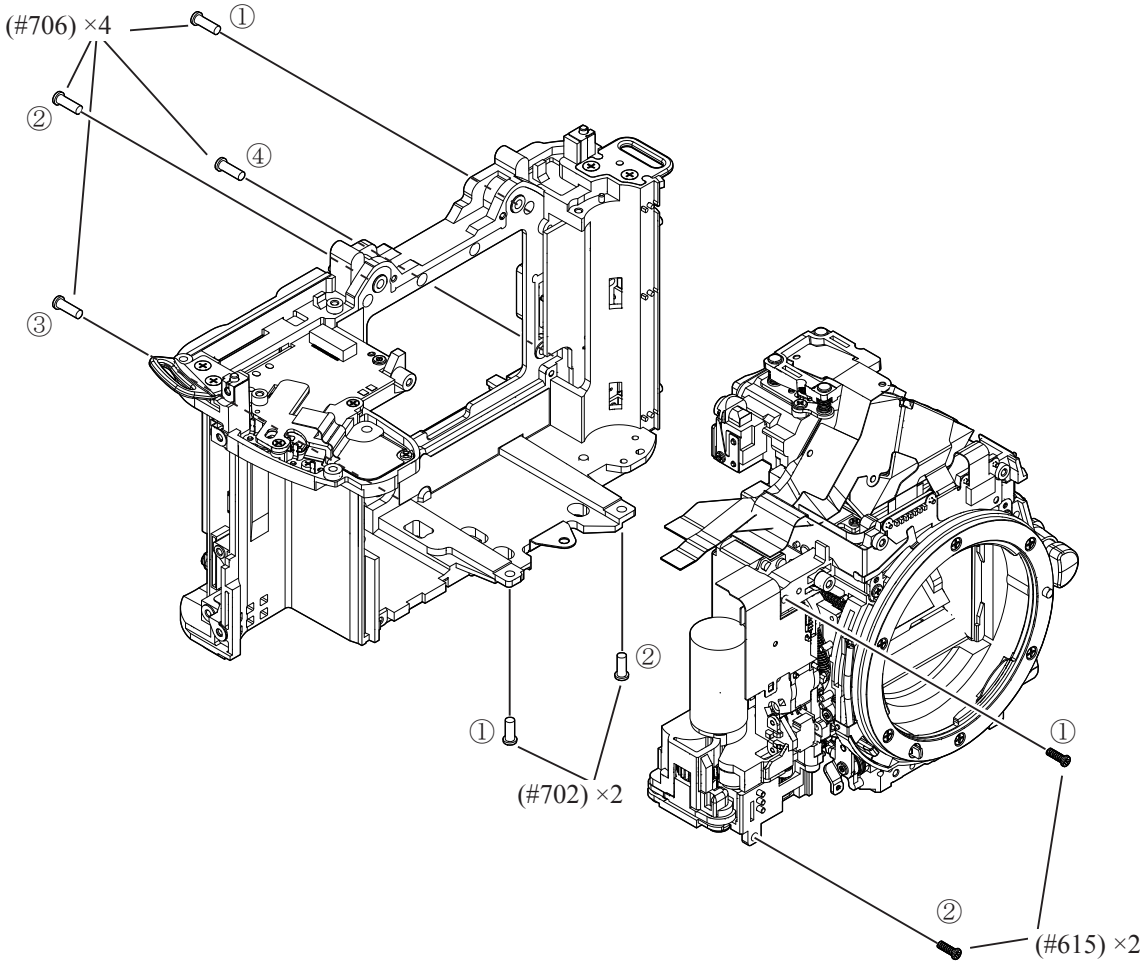

Eyepiece mold

- Attach the sponge (#779), the eyepiece mold (#291), and the sponge (#752).
- Tighten the two screws (#615).

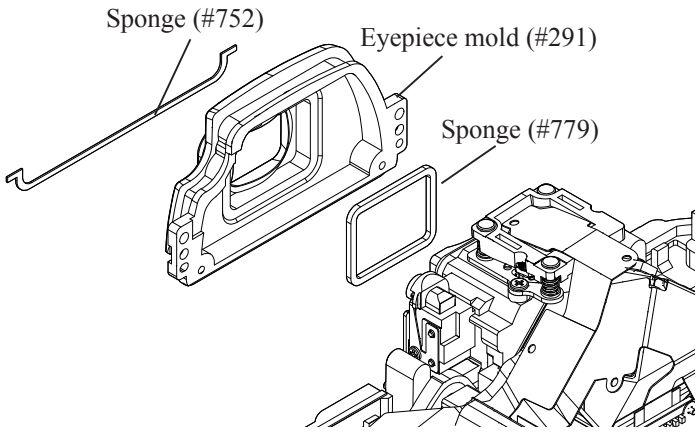

Inspection and Adjustment of Body back

・"0" positioning of the dial gauge

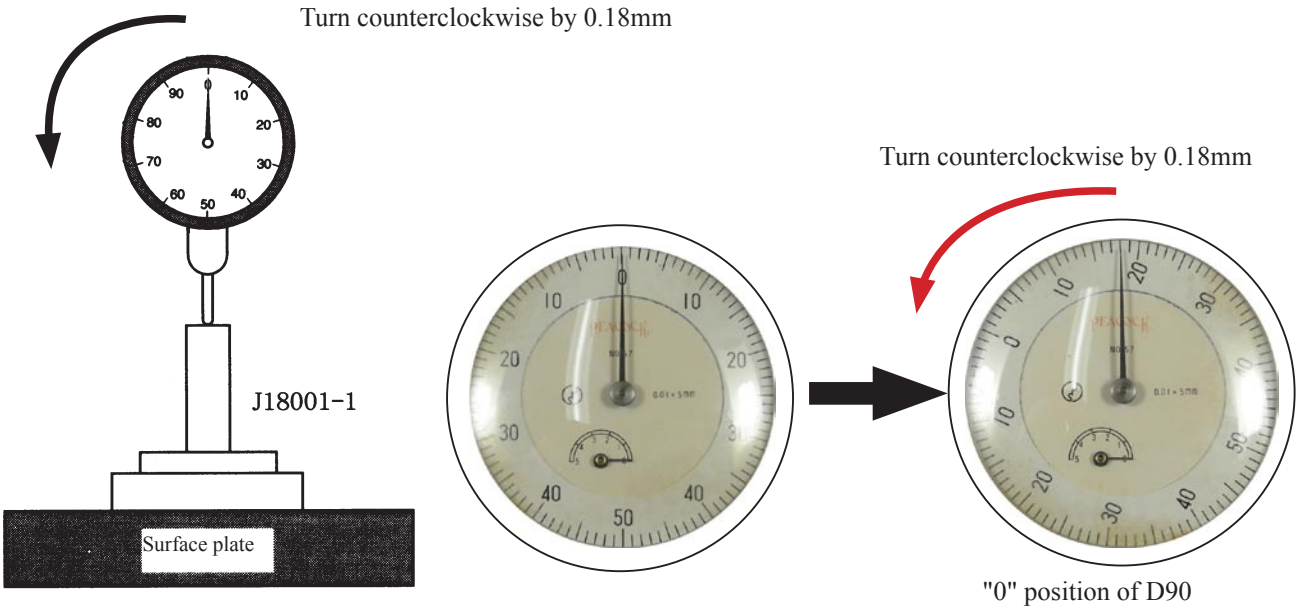

(1) Mount the tool (J18001-1) on the surface plate as above, then set the dial gauge to "0".

(2) From "0" position of (1), turn the index circle in the direction of the arrow so that the needle is on 18 (0.18mm) position. (This position is "0" position of D90.)

(3) Measure the body back based on "0" position of the index circle.

・"0" positioning of the digital gauge

D90: 48.49 ㎜ - 46.67 ㎜ (body back height) ＝ 1.82 ㎜

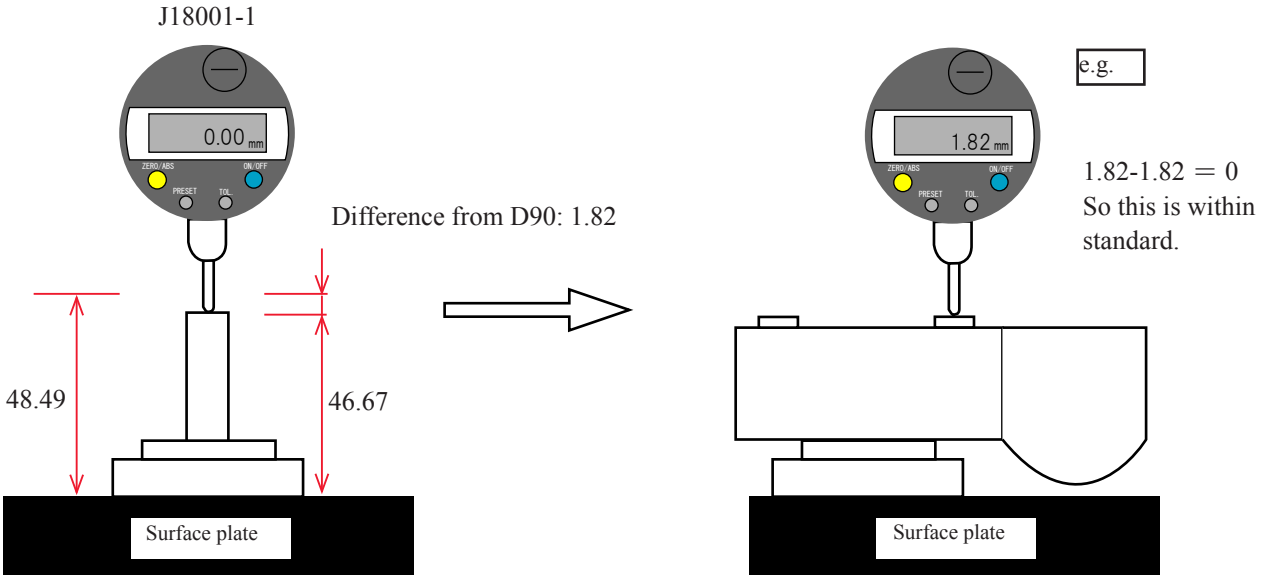

(1) Mount the tool (J18001-1) on the surface plate as above, then turn the digital gauge ON and press [ZERO/ABS] button so that the value becomes "0".

(2) Measure the body back based on "0" position

(3) Subtract "1.82mm" from the measured value. If the value is "0±0.01 mm / Parallelism: 0.015mm or less", it is within standard.

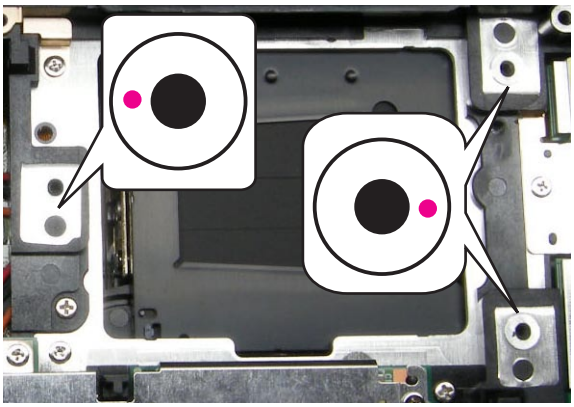

- Measure six places from the bayonet face to the image PCB attaching face.
  ● mark: to be measured

Standard: 48.49±0.015mm / Parallelism: 0.015mm or less

- In case the result is out of standard, make an adjustment by putting the washers between the front body and the rear body.

Note: For some bodies, the washer(s) is/are already put on the attaching face of the image PCB . There is a red mark indication at the following three positions.

1. Indication: on the attaching face of the camera body side
   Purpose : To adjust the height of the camera body
2. Indication: on the attaching face of the image PCB side
   Purpose : To adjust the height of the image PCB
3. Indication: at the corner edge on the attaching face of the image PCB side
   Purpose: To adjust and position the image PCB

Therefore, in case of the above 1., when the camera body is disassembled or the image PCB is replaced, put the washer at the original position. In case of the above 2 and 3, when the image PCB is replaced, remove the washer.

Mark indication

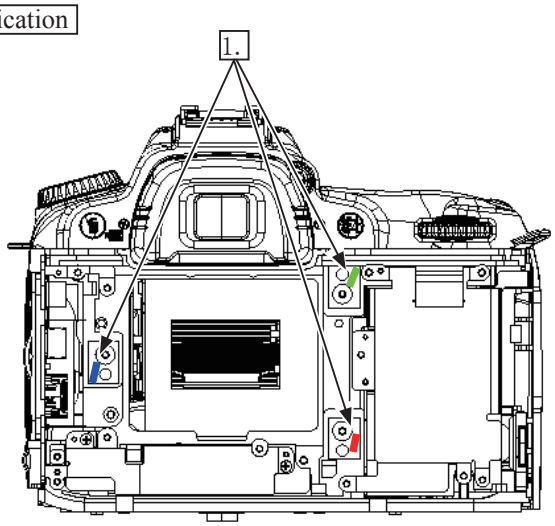

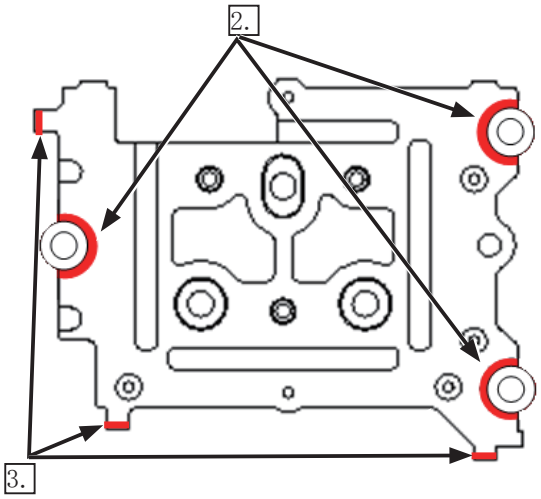

Device

J19004-1	J18001-1
	
DIAL INDICATOR AND STAND	BODY BACK FOCUS GAUGE

・Fit the mount GND wires (Black/Gray) in the side hook.

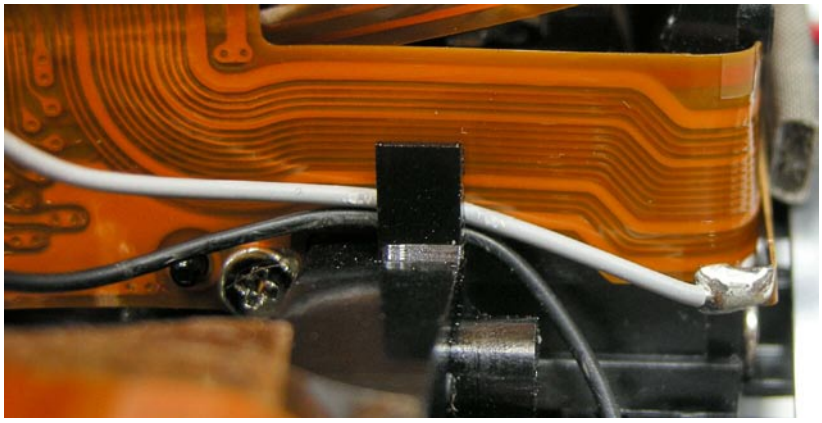

・Make the two solder brides on the power drive PCB (#B1002).
・Solder the wires (Black/Red) of the SQ motor.
・Solder the wires (Black/Gray) of the mount GND.
・Solder the wires (Black) of the buzzer unit.

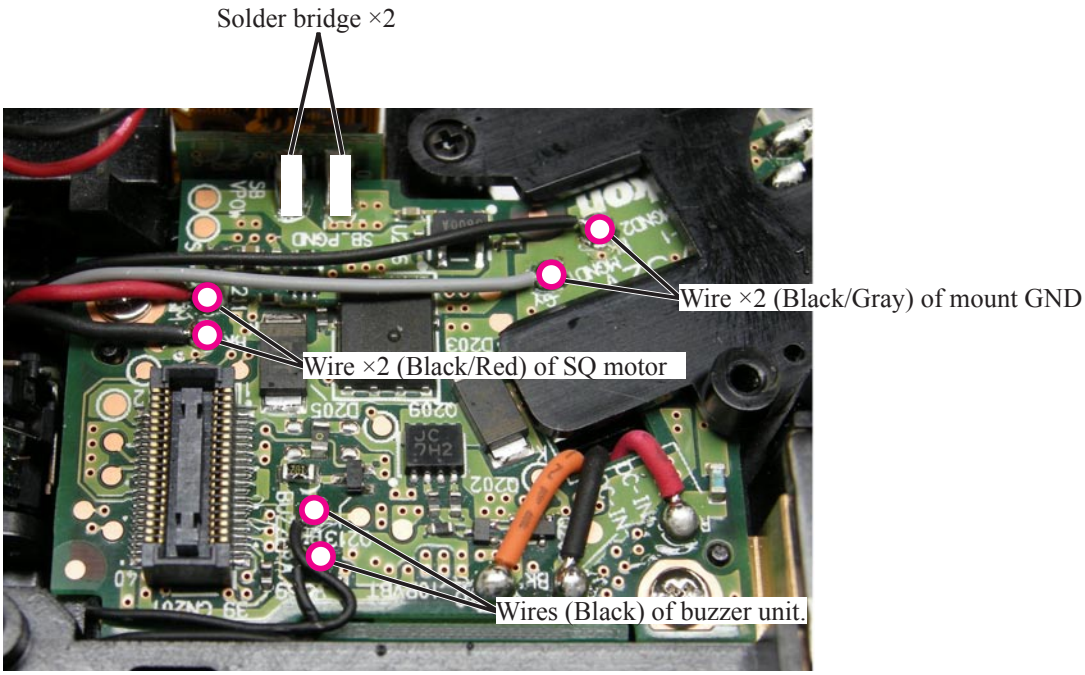

Main PCB

- Mount the main PCB (#1001) by connecting the connectors.
- Place the FPC in the clearance between the PCB and rear body.
- Tighten the two screws (#640).

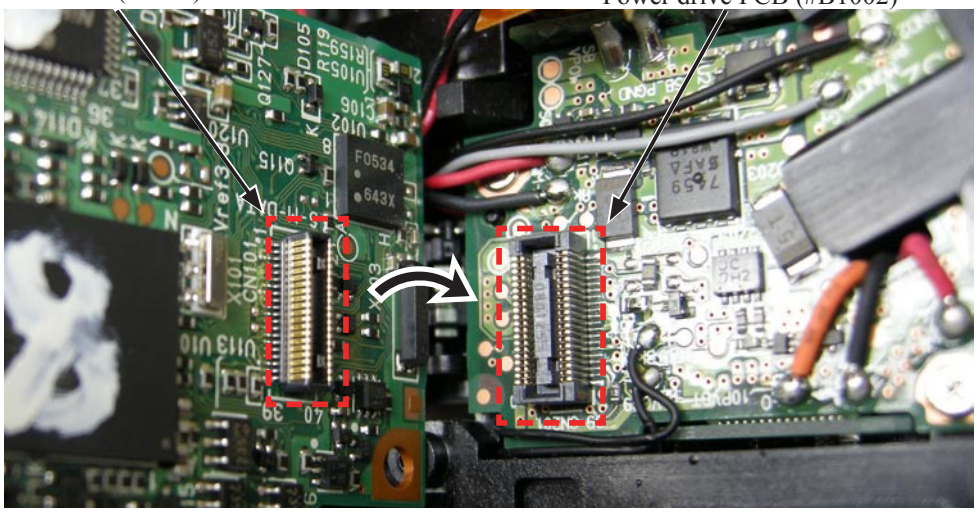

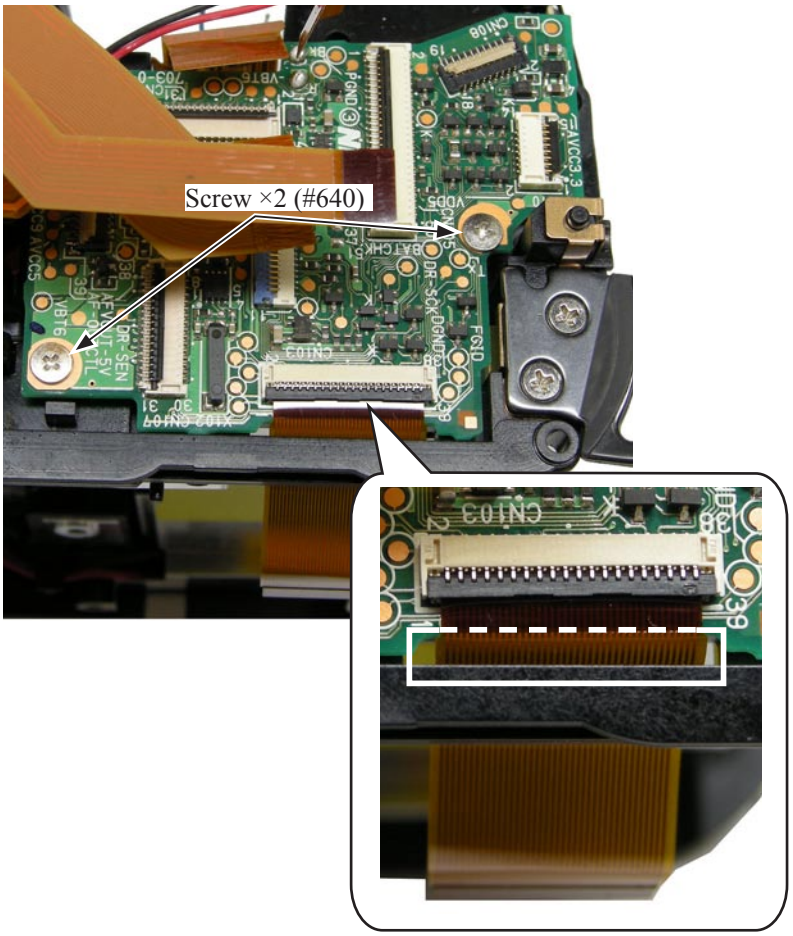

・Fit the front body FPC wires (Red/Black) in the side hook.

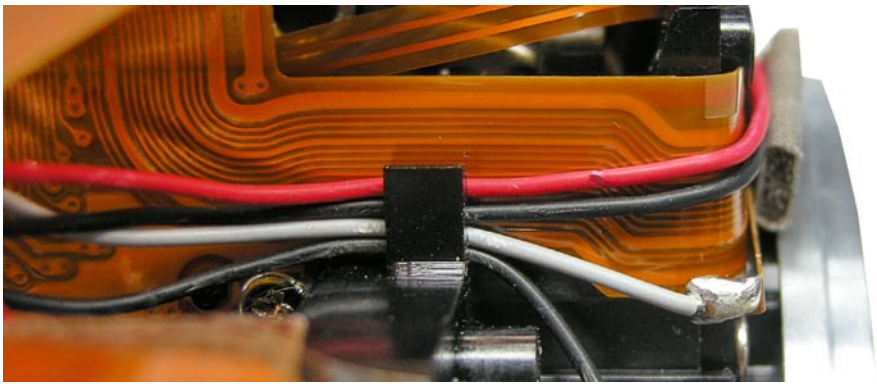

・Connect the five FPCs to the connectors.

・Solder the wires (Red/Black) of the front body FPC.

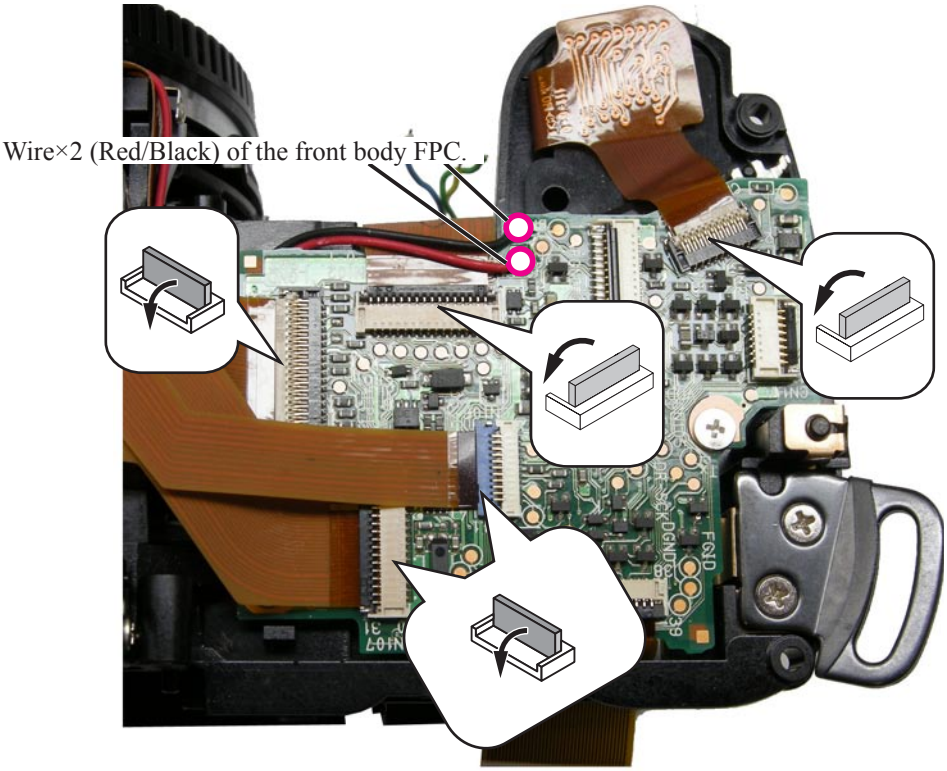

Mount the main condenser

・Attach the main condenser unit (#B42) by fitting with the bosses.

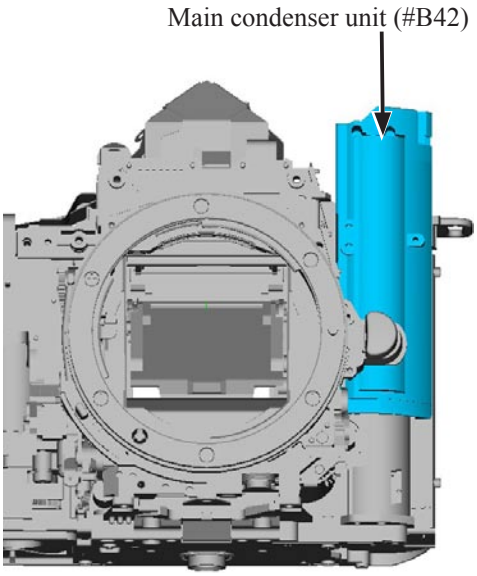

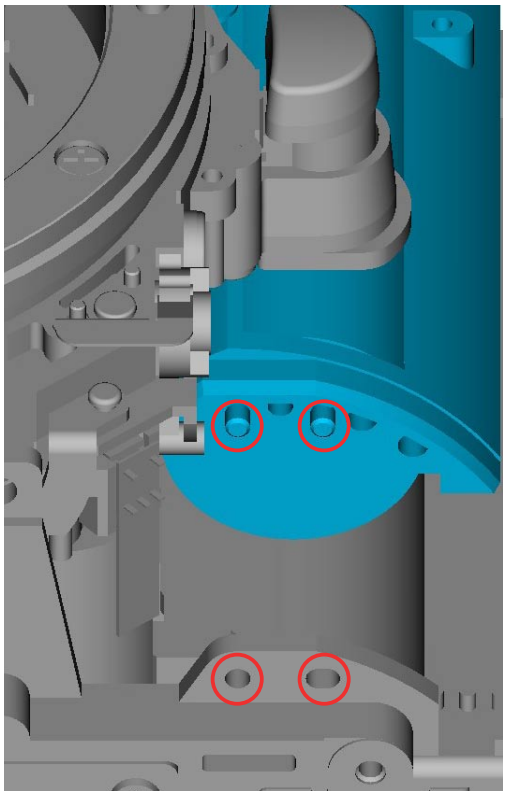

・Tighten the screw (#683).

・Solder the wires (Red/Black).

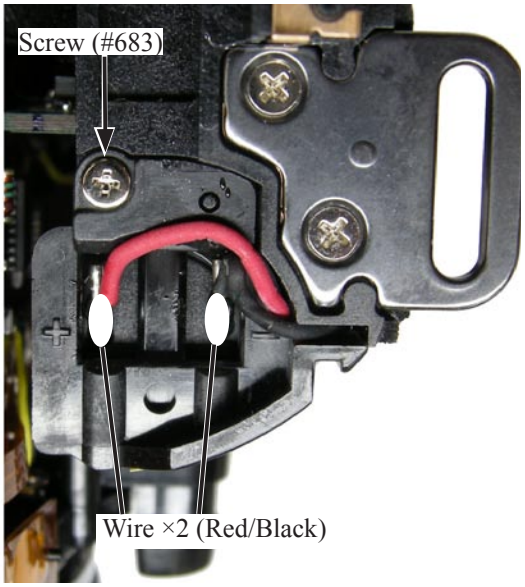

5. Top cover

- Attach the double-stick tape (#338) and the LCD window (#335).
- Apply the adhesive (super X) to the remote control window (#463), and mount the remote control window (#463).
- Apply the adhesive (super X) to AF assist lamp protector (#326), and mount the AF assist lamp protector (#326).

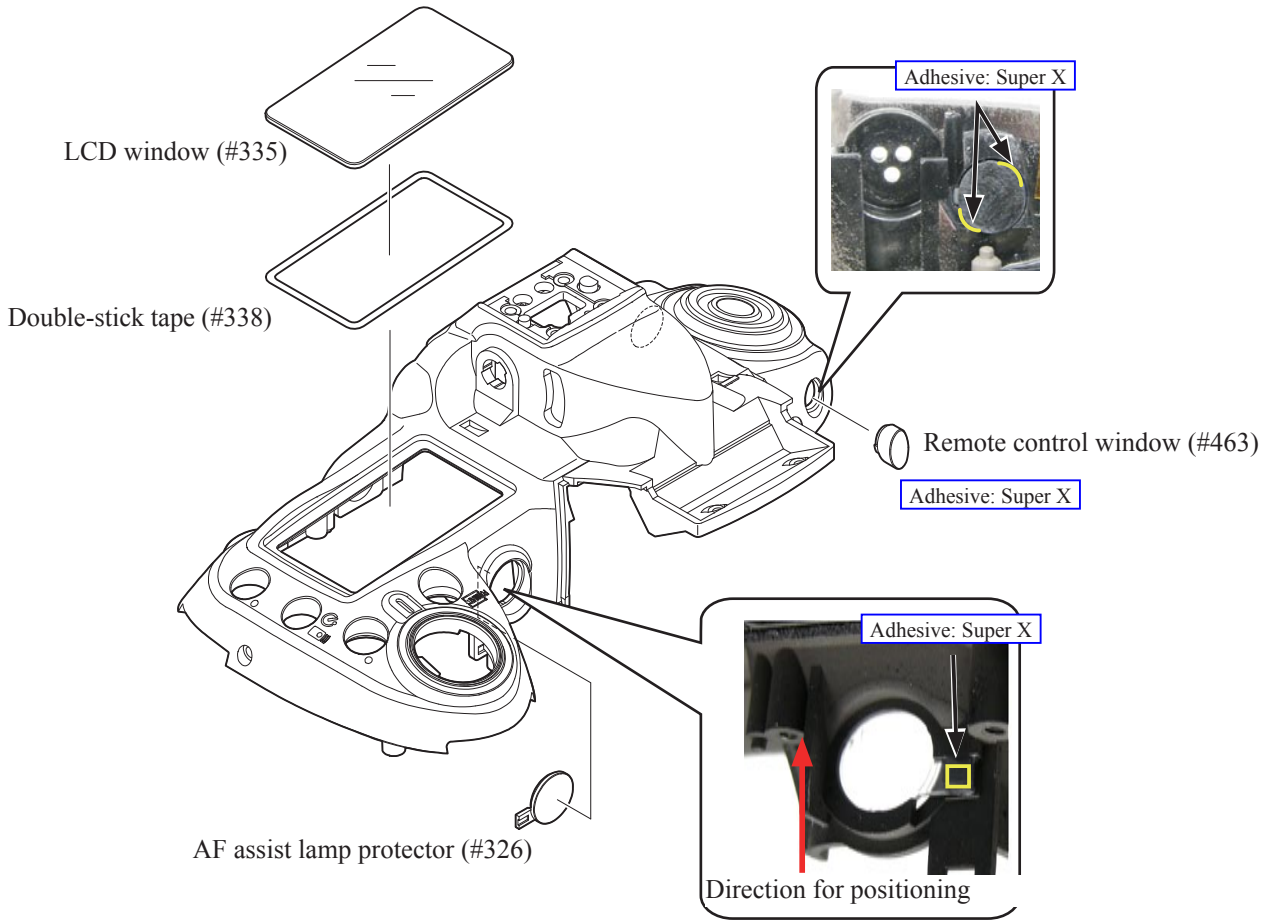

- Attach the two sponges each (#336 and #337).
- Attach the two sponges each (#756 and #758).

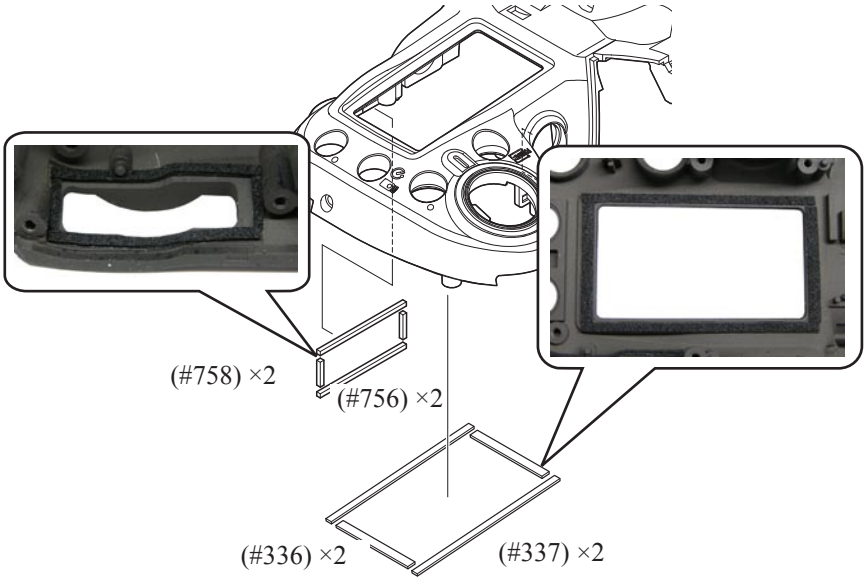

Microphone

- Attach the double-stick tape (#464) to the microphone (#1051).
- Mount the microphone (#1051), and attach the tape [TA0009 (6×6)].

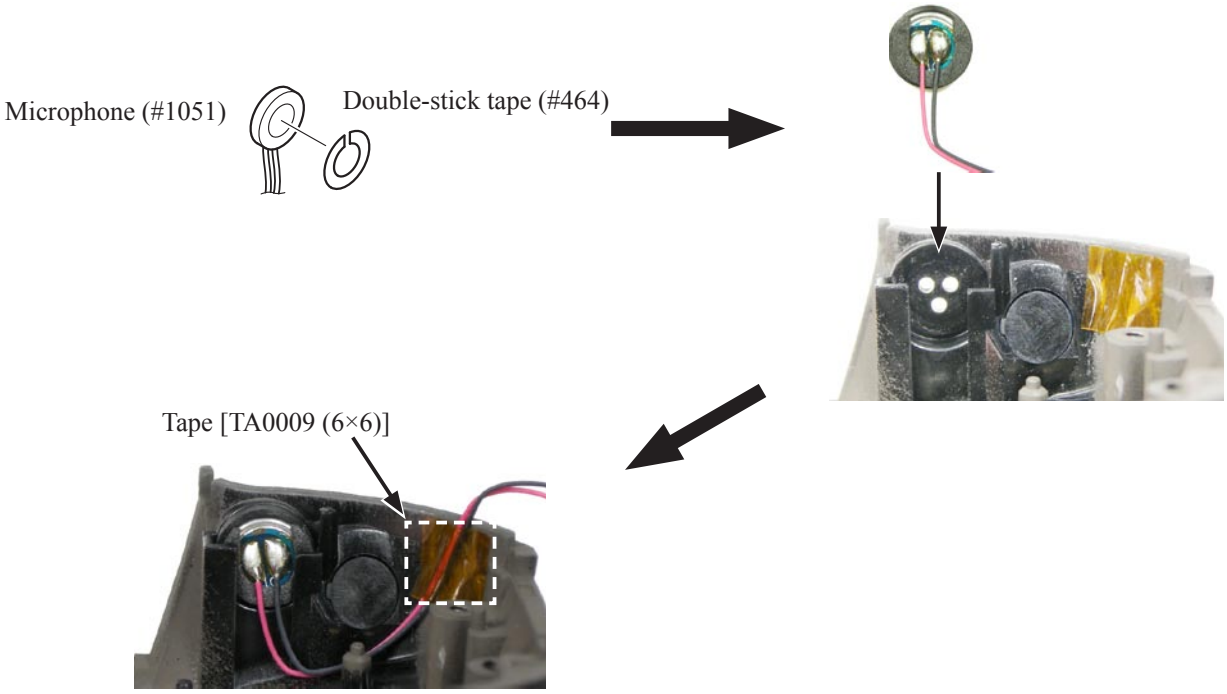

Mode dial

- Mount the mode dial (#451).
- Mount the click spring (#453) and the contact brush (#452) by fitting with the bosses.
- Tighten the screw (#640).
- Attach the mode dial cap (#460) with the double-stick tape [TA0026 (8×8)].

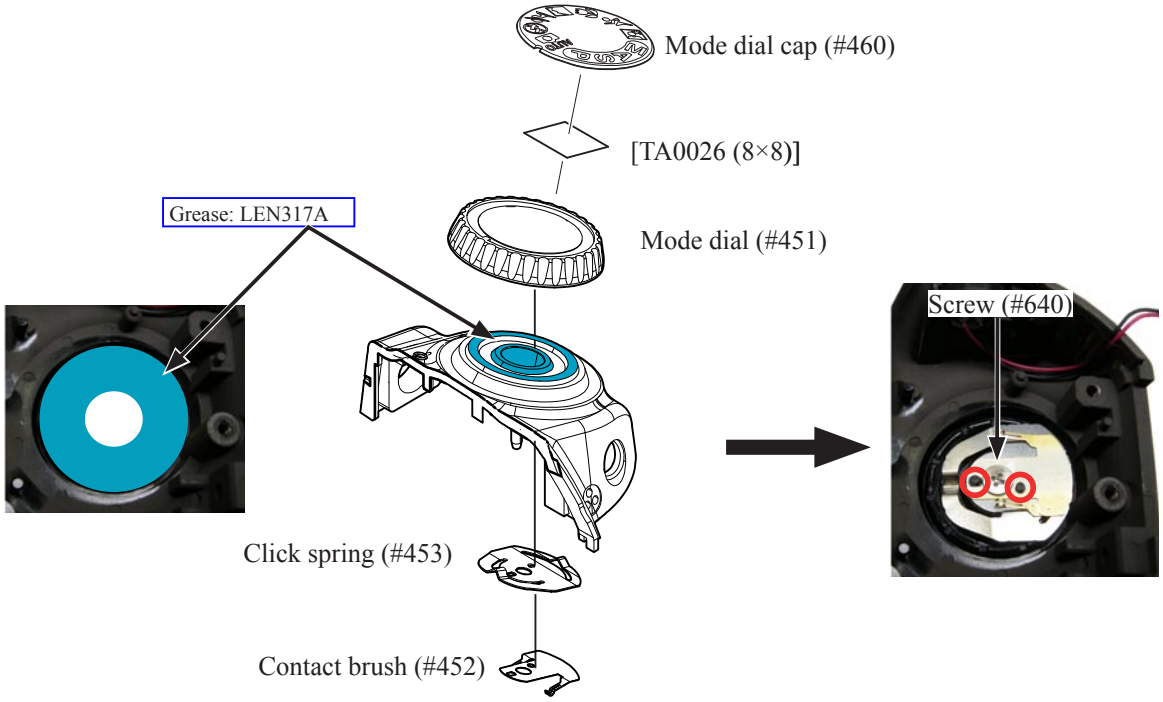

Delete button

・Attach the button (#398) and the conducting rubber (#399).

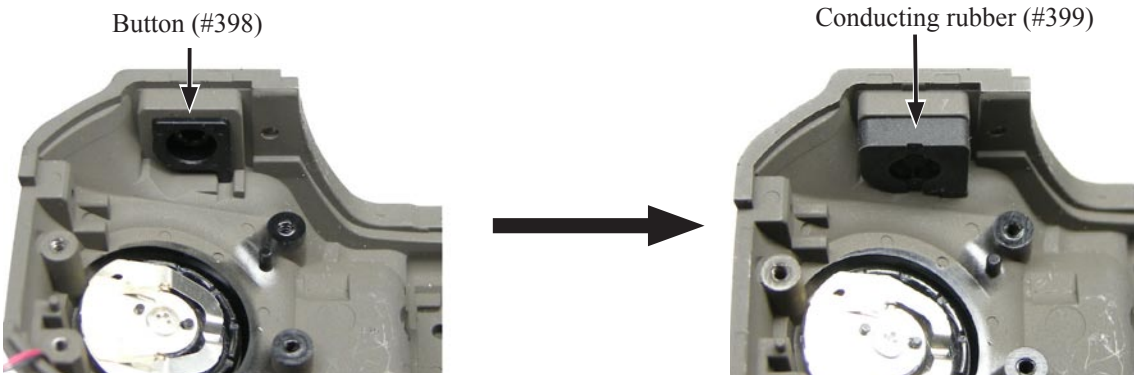

M/D FPC unit

・Mount the M/D FPC unit (#B2455) by fitting with the bosses and fitting the end of lever into the hole of the top cover.

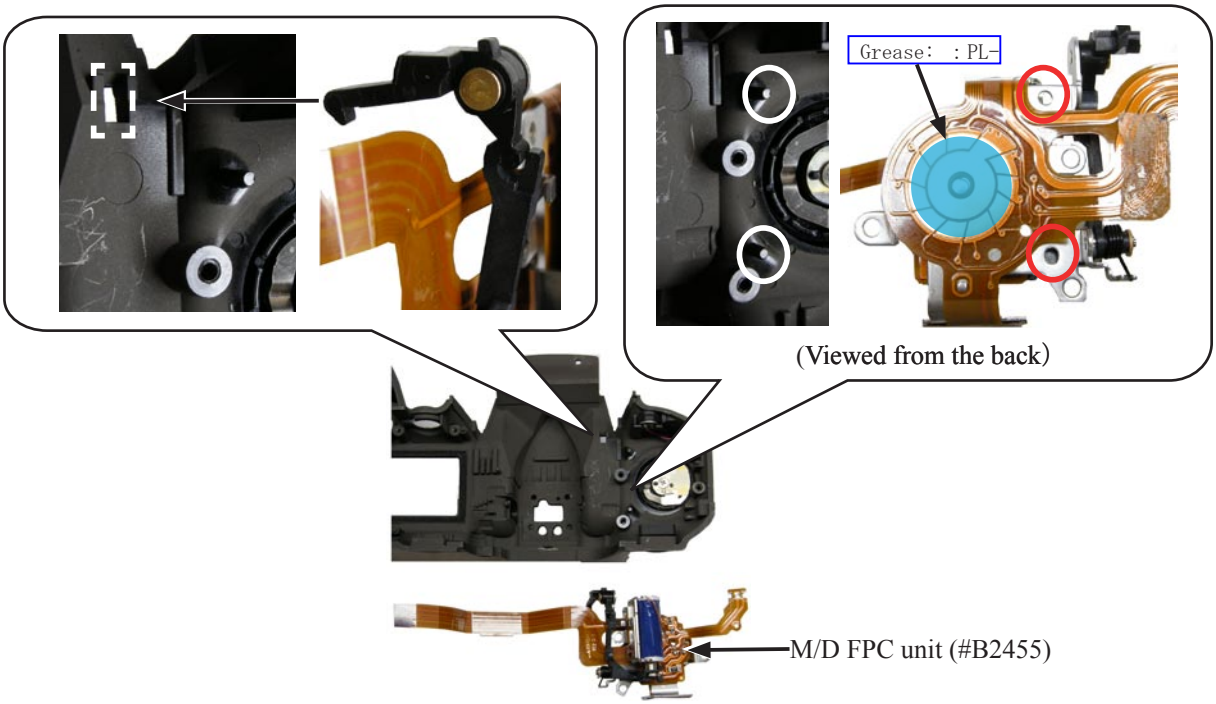

・Tighten the three screws (#640) in numeric order (①→②→③).

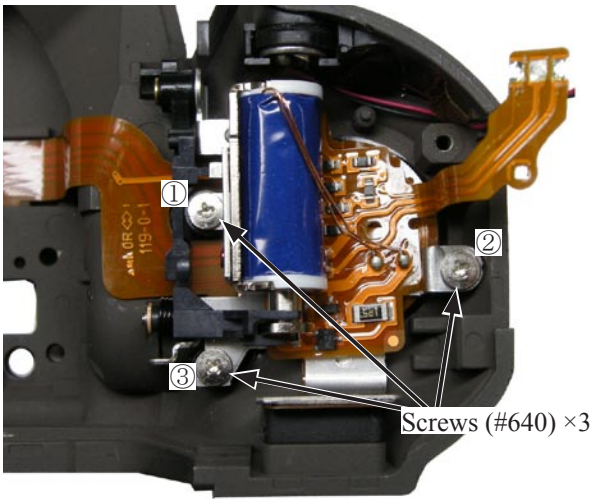

Remote control unit

・Attach the remote control unit (#B1056) by fitting with bosses, and tighten the screw (#607).

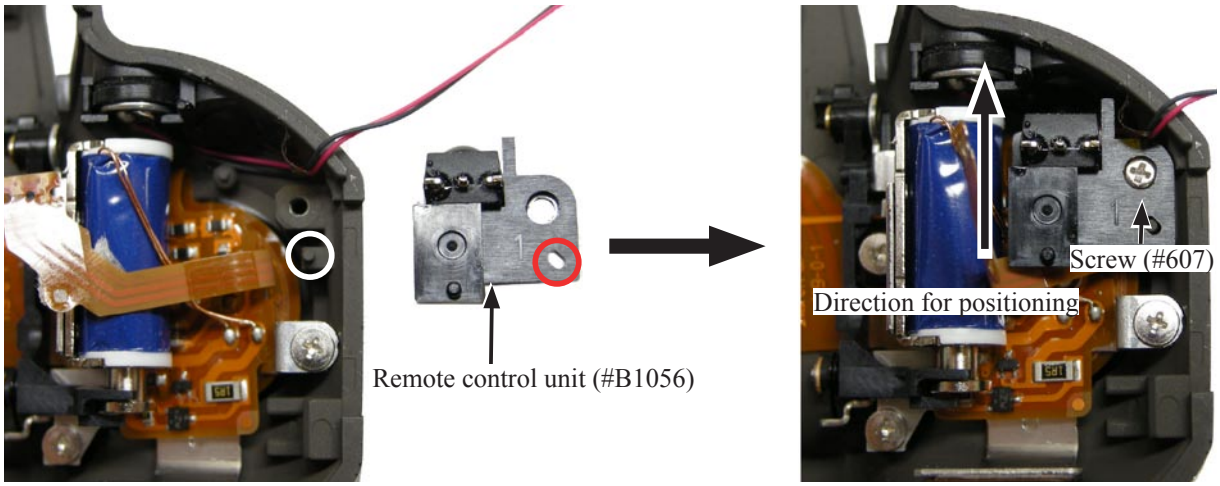

・Make the three solders.

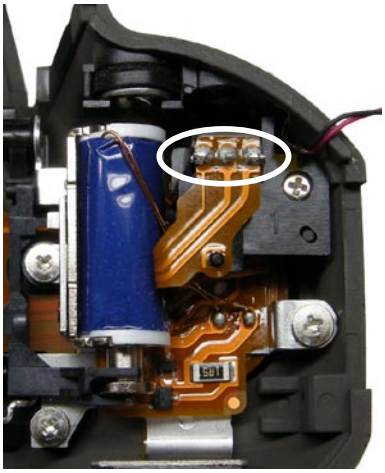

SB lower control unit

- Attach the flash pop-up arm A (#B341) to the SB lower control unit (#B2302).
- Attach the flash pop-up arm B (#B342) to the top cover.
- By pulling both sides of [#B2302] outwards, assemble it in numeric order.

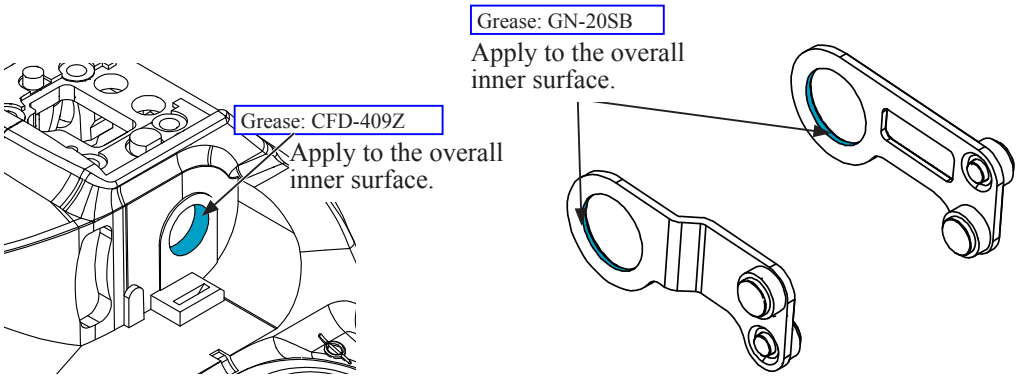

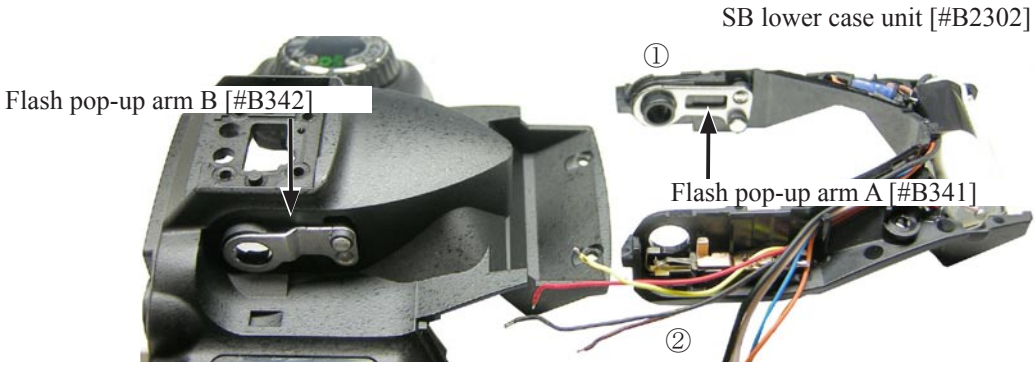

- Attach the roller (#308) and the SB case rotate shaft (#306).

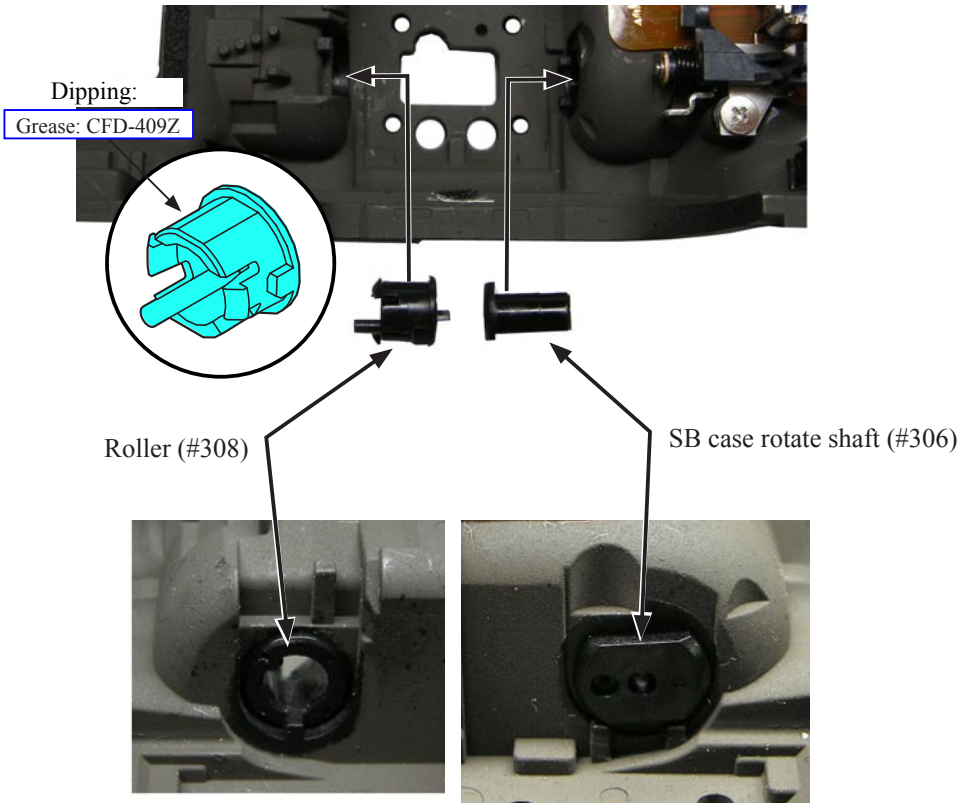

・Hook the spring (#305).

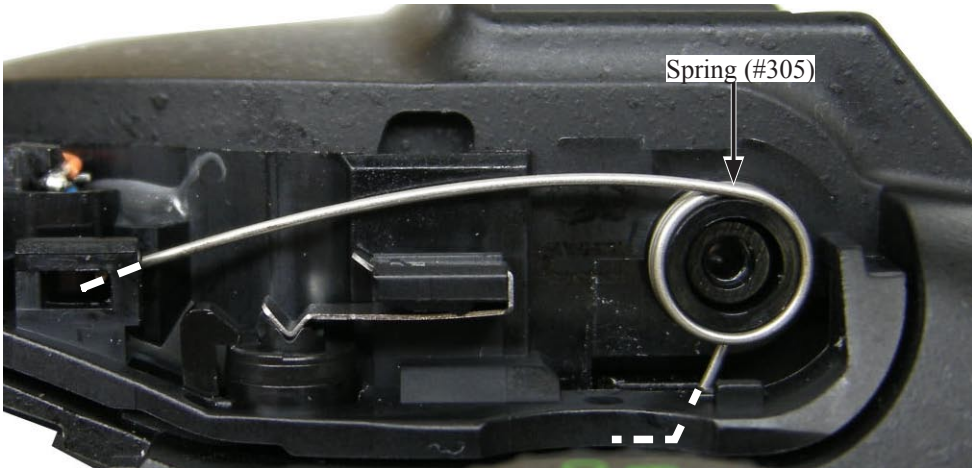

・Tighten the screw (#650).

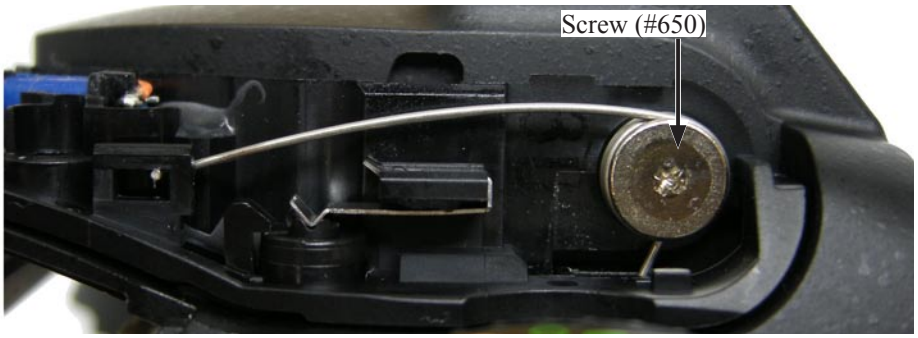

・Pass the two wires each in the following order through the hole of the roller (#308).

① Black (Thick)/Pink, ② Orange/Blue, ③ Black (Thin)/Red, and ④ Yellow/Brown.

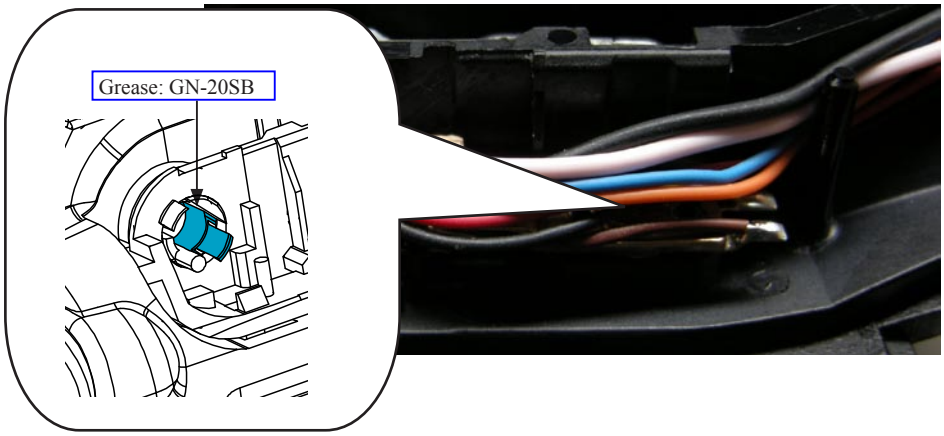

・Arrange the wires by fitting with the bosses as below.

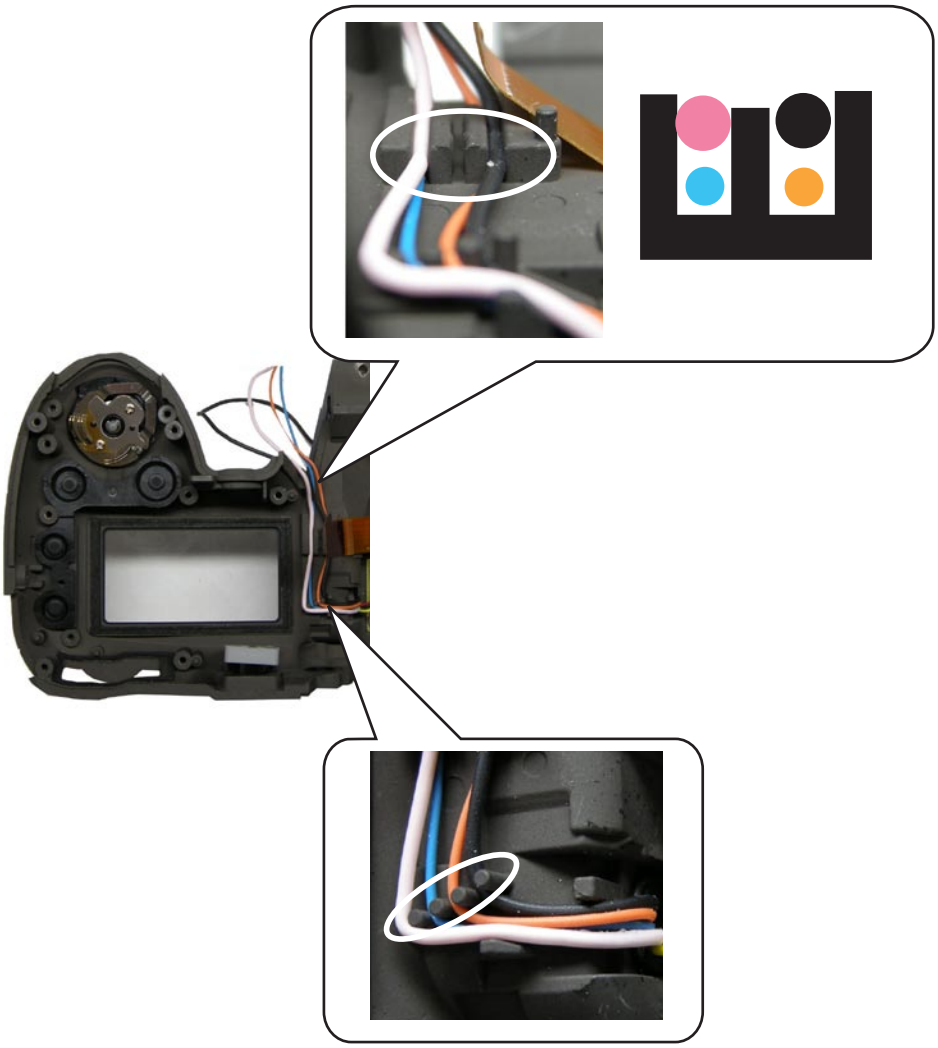

SB upper cover

・Mount the SB upper cover (#301), and tighten the two screws (#629).

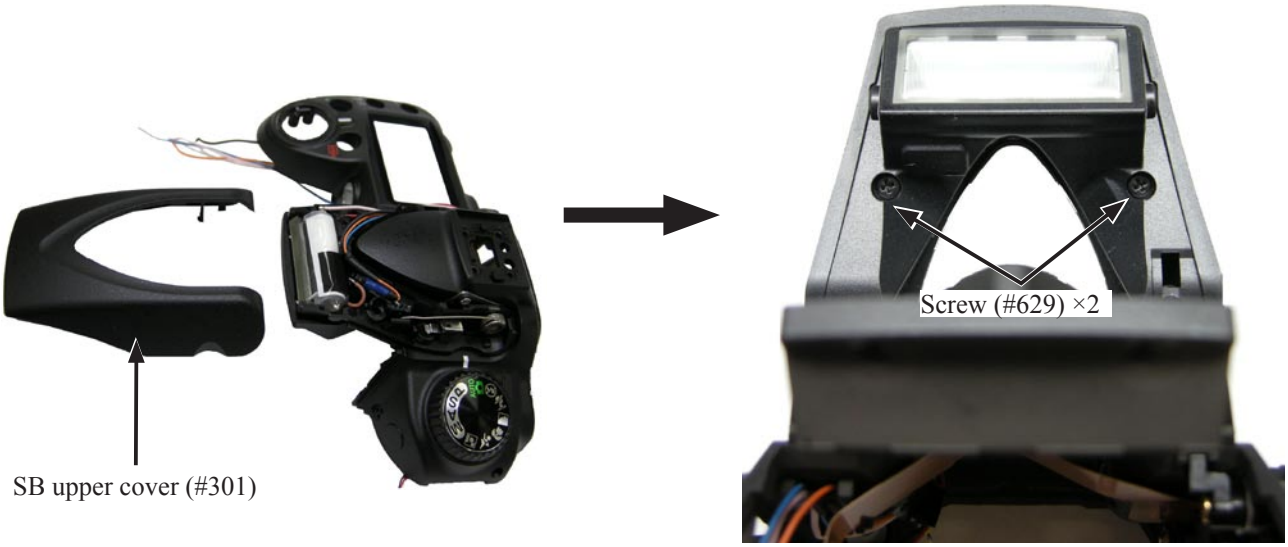

Hot shoe

- Mount the shoe mold unit (#B317), hot shoe (#316) and hot shoe spring (#318).
- Attach the holder (#321) and the GND plate (#322).
- Tighten the four screws (#654) in numeric order as below.

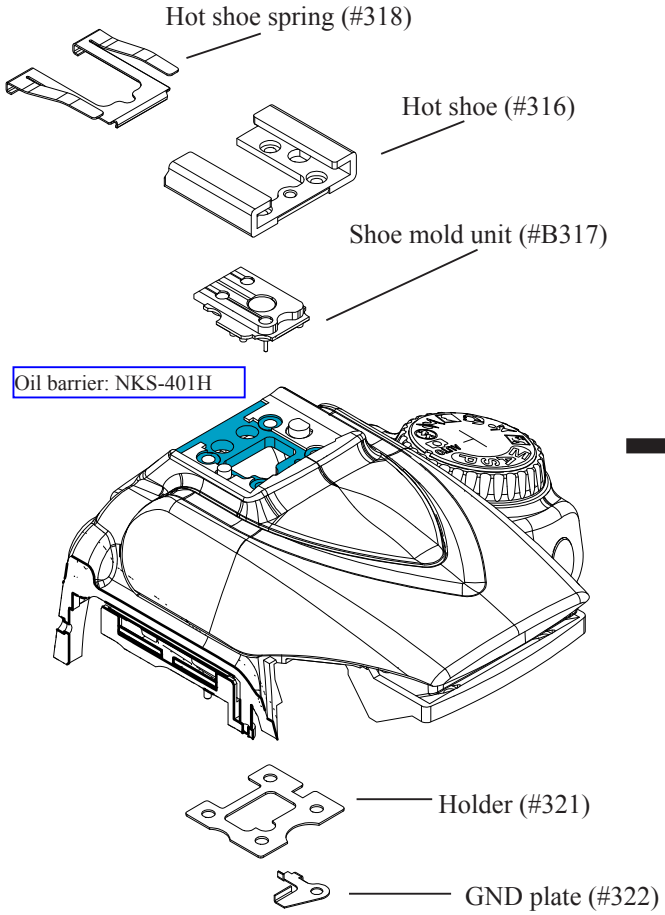

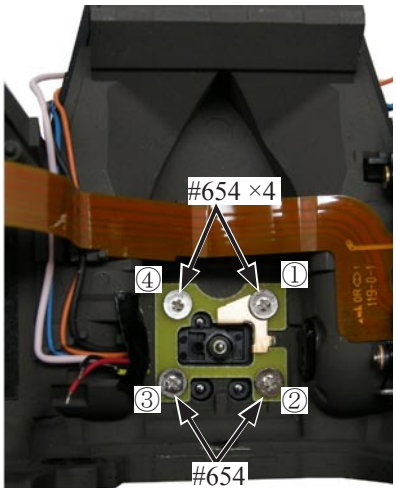

Power dial

- Attach the release button unit (#B350) from outside, and hook the spring (#346).
- Attach the sheet (#352).

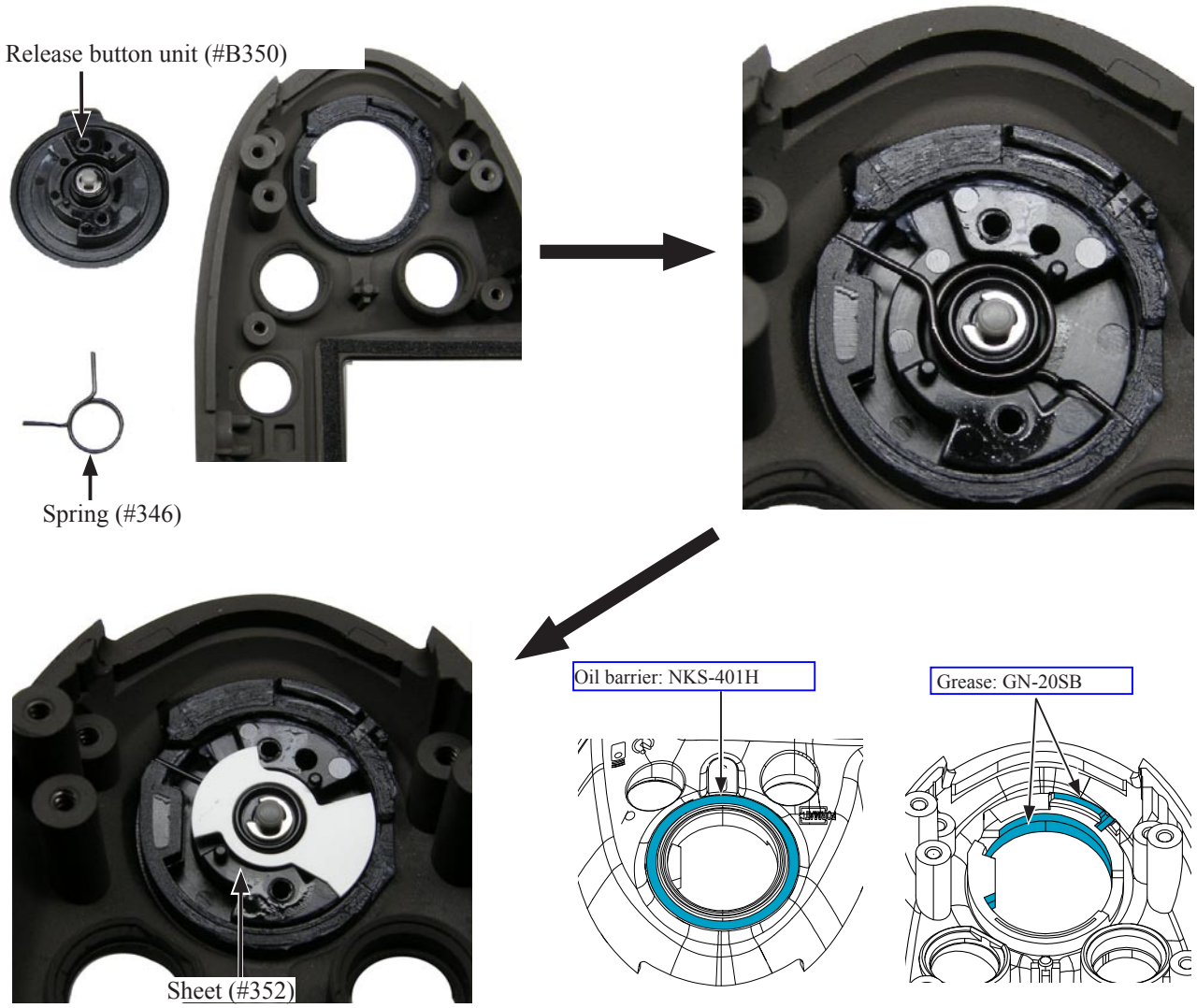

- Attach the click spring (#347) and the contact brush (#348).
- Tighten the two screws (#602).

Top cover grip button

・Mount the button (#339).

AE-L button

・Attach the button (#381) and conducting rubber (#397).

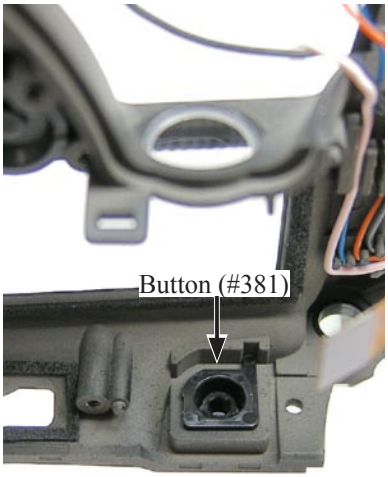

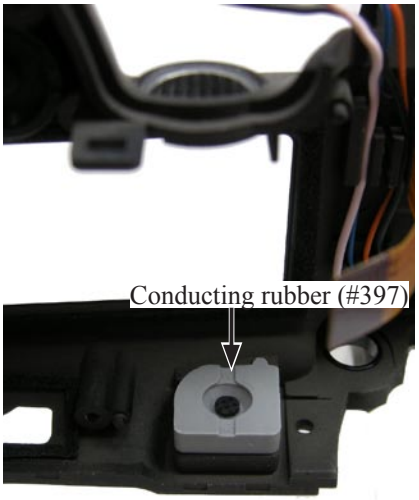

Top cover FPC unit

- Mount the reflection sheet (#334) and the light guide (#333) to the top cover FPC unit (#B1007RP).
- Position the two conducting rubber (#332) in the direction of the red arrows, and attach them.
- Position the upper LCD (#1044) in the direction of the blue arrows, and mount them.
- Mount the plate (#331) by engaging the four hooks of the top cover FPC unit (#B1007RP).

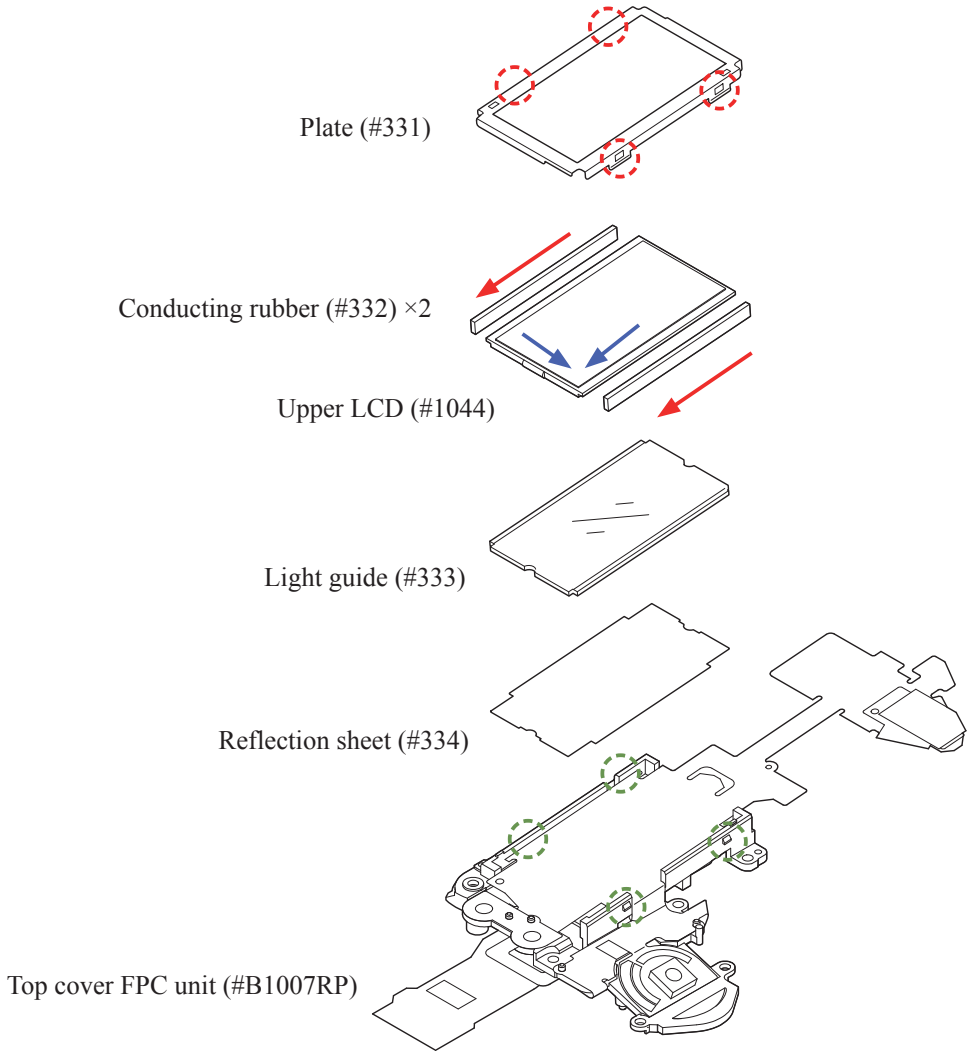

- Attach the tape (#825).

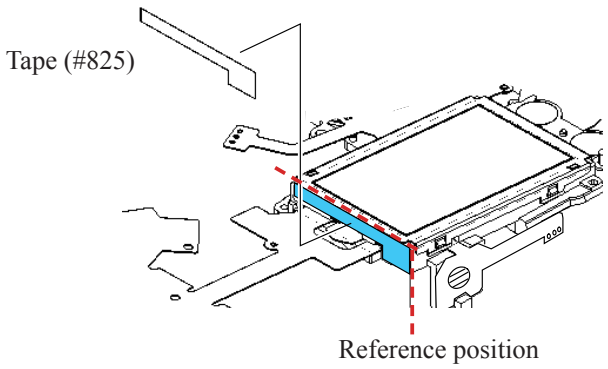

・Mount the top cover FPC unit (#B1007RP) by fitting with the boss.

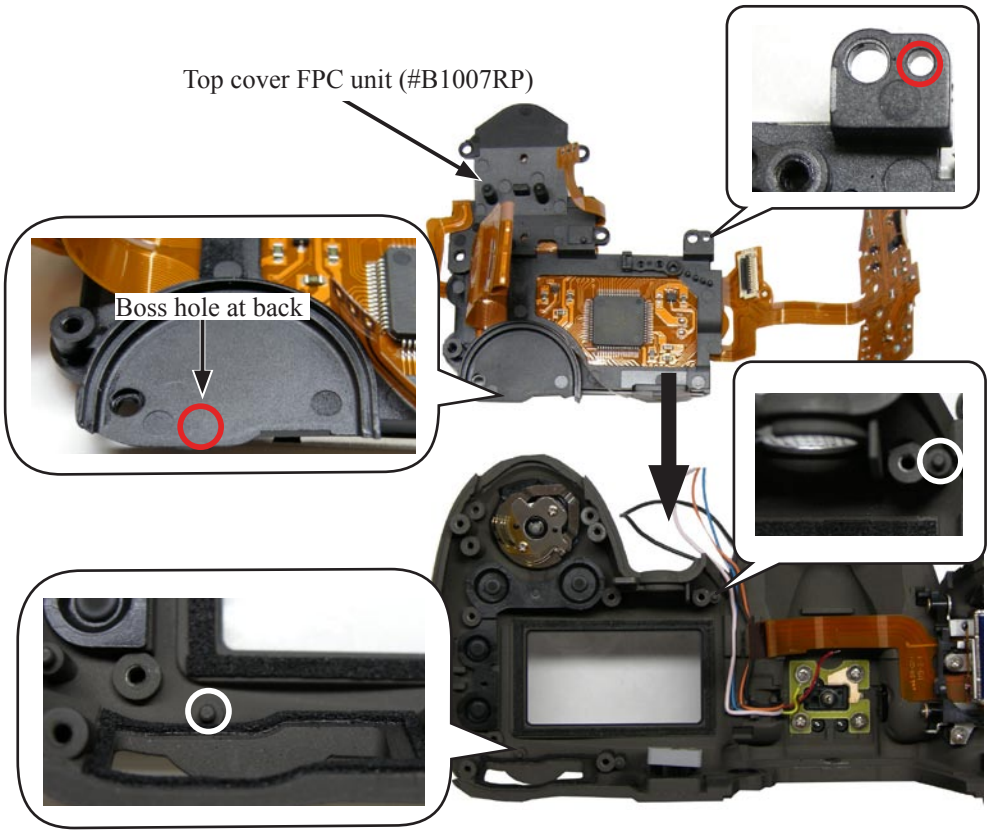

・Mount the arrangement plate (#340), and tighten the screw (#612).
・Tighten the three screws (#612) (which are for the top cover FPC unit) in numeric order (①→②→③) .
・Tighten the screw (#605).
・Tighten the screw (#607).

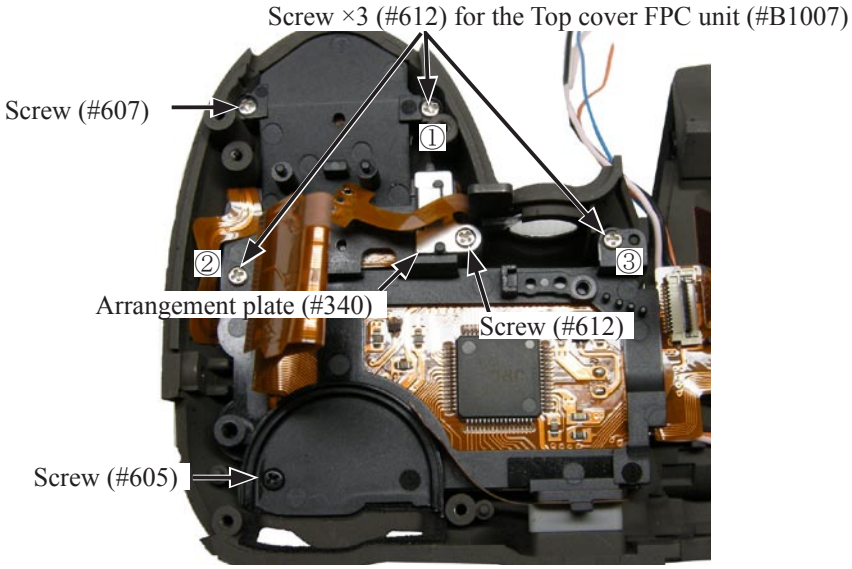

Mount the MC/D unit (#B367) and the SC/D unit (#B377) by fitting with the bosses.

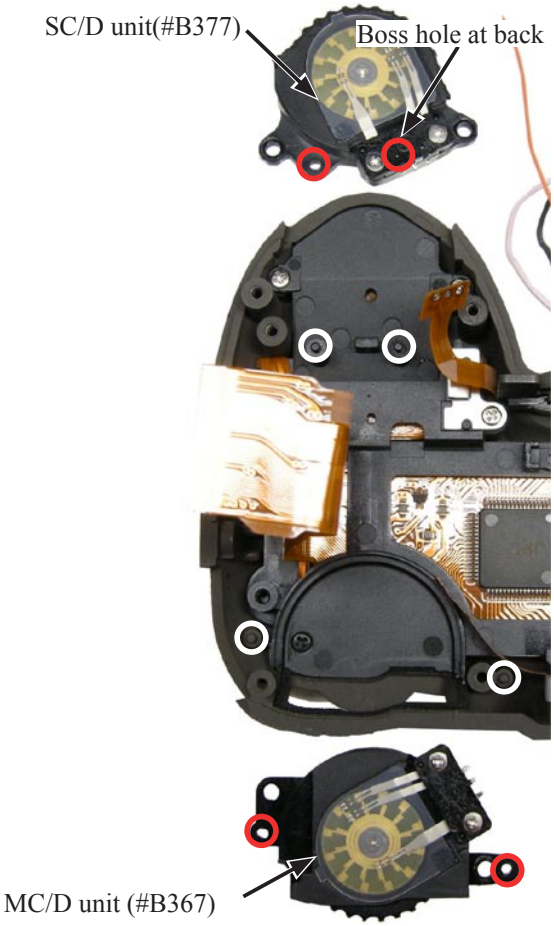

・Tighten the four screws (#635), and make six solders.

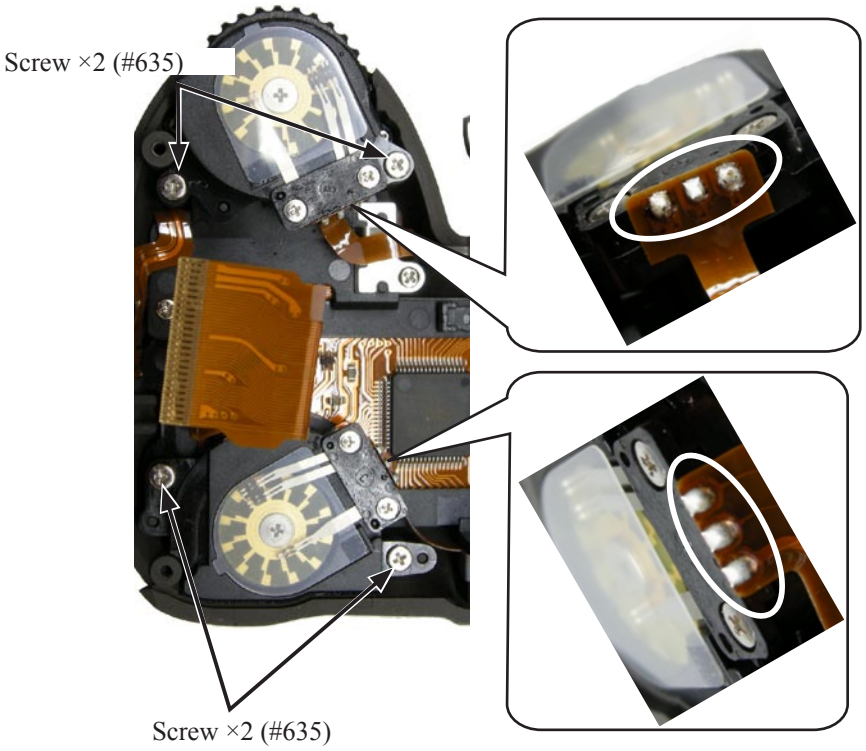

・Arrange the wires as below.

・Connect the connector.

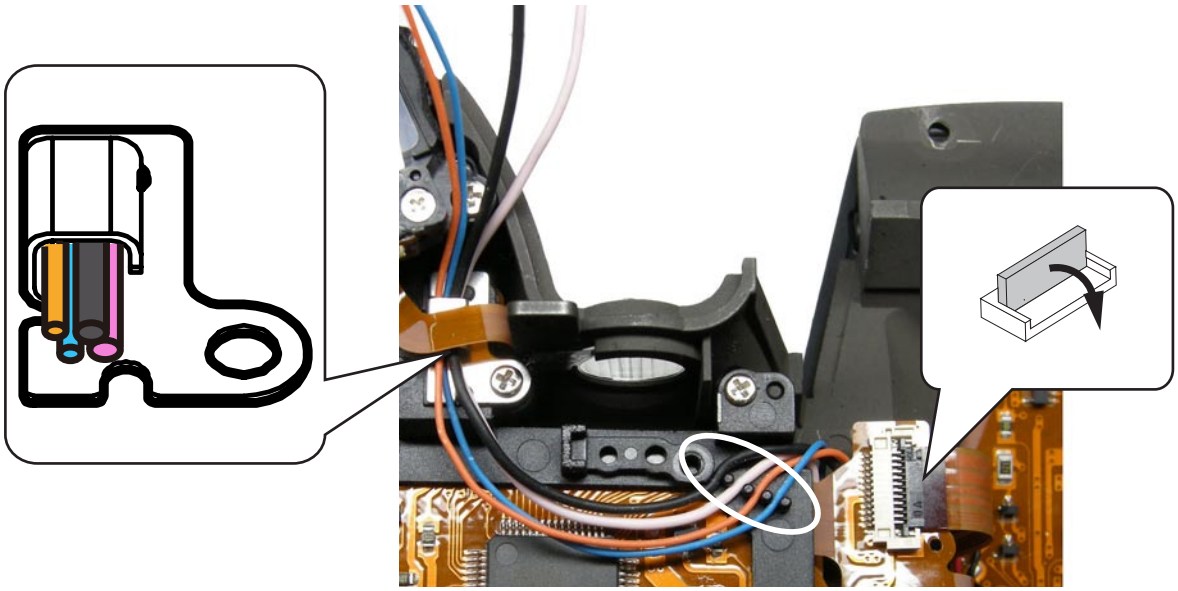

・Solder the five contacts of the shoe mold unit (#B317).

・Solder the wires (Brown/Yellow).

・Solder the wires (Red/Black).

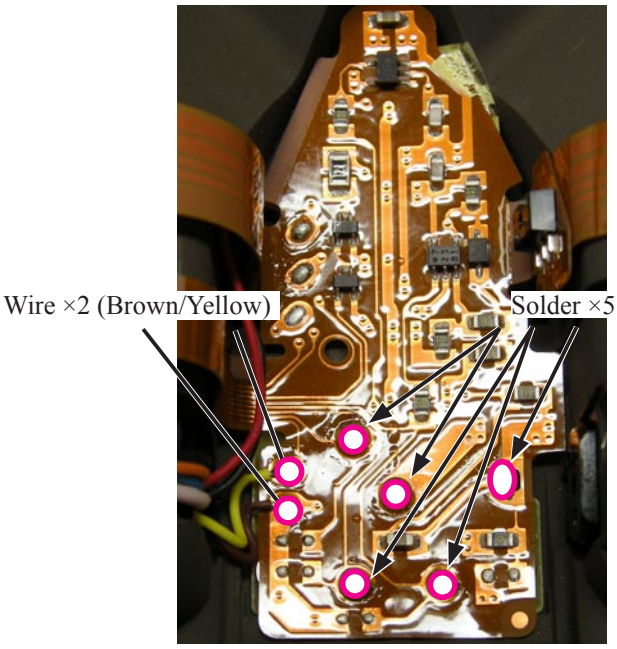

AF assist lamp unit

- Mount the AF assist lamp unit (#B325) by fitting with the bosses, and tighten the screw (#611).
- Solder the two wires (Black).

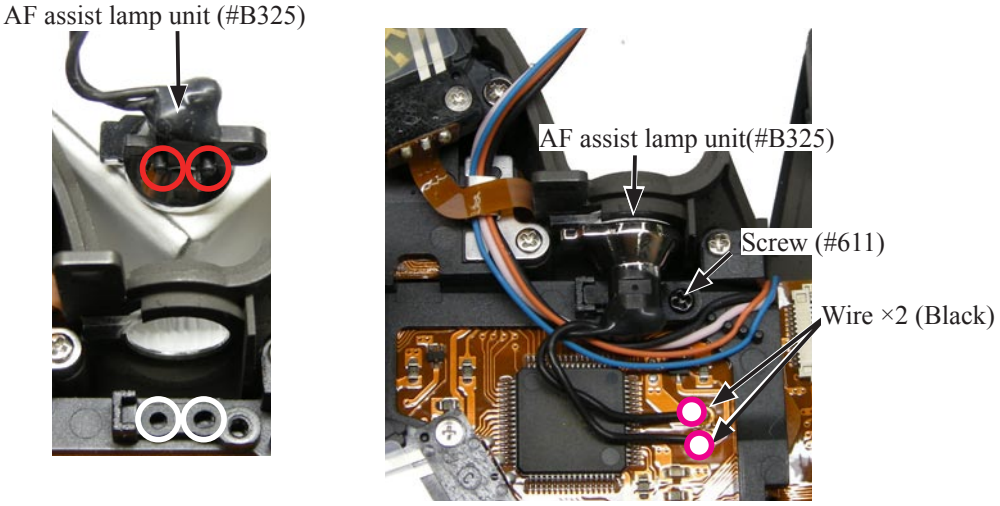

Mount the top cover on the body

A75 △ (Revision)
(Refer to Page ~~A69~~ for "Inspection and adjustment of AE-CCD position".)

・Push the wires (four SB wires and two microphone wires) of the top cover unit (#B23RP) to the bayonet side.

・Connect the FPC of the top cover unit (#B23RP).

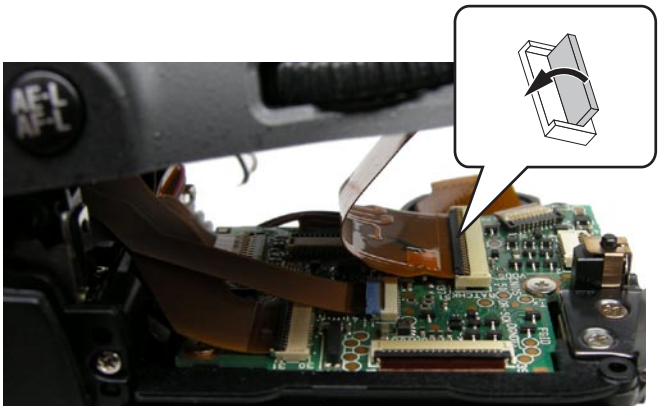

・Attach the microphone (#1051) by fitting in the cutout.

・Attach the tape [TA0005 (6×10)] to fix the microphone lead wires.

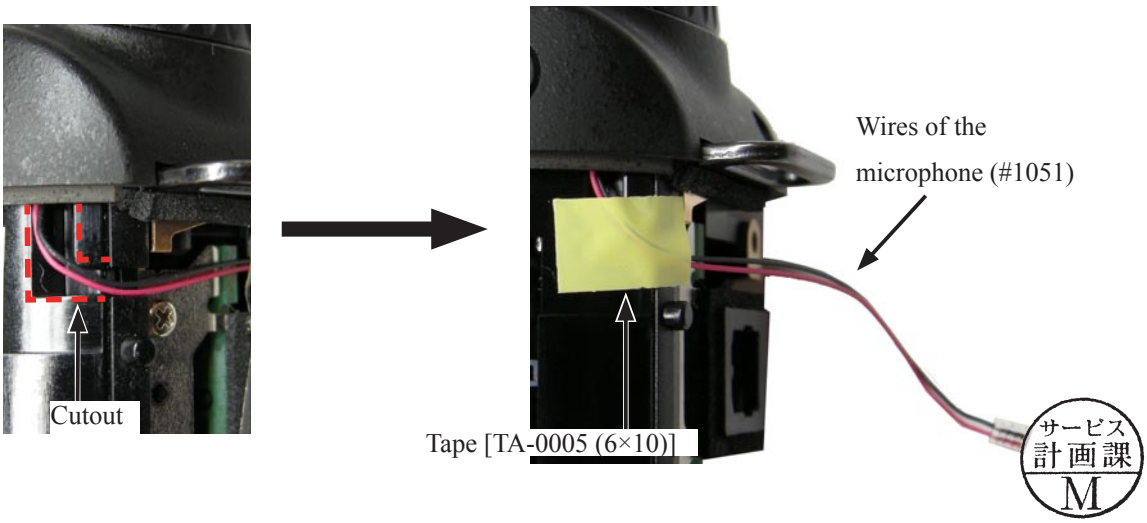

サービス
計画課
M

・Tighten the two screws (#677).

・Tighten the two screws (#657).

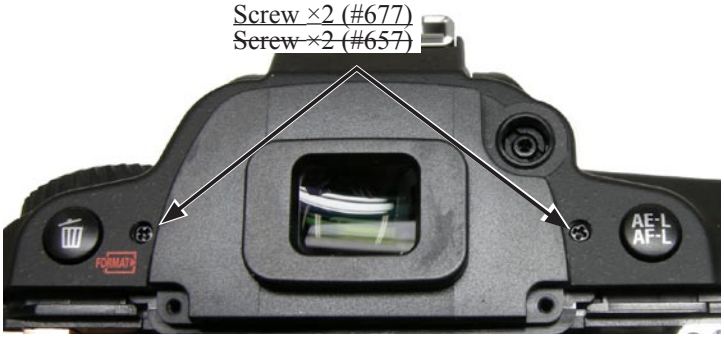

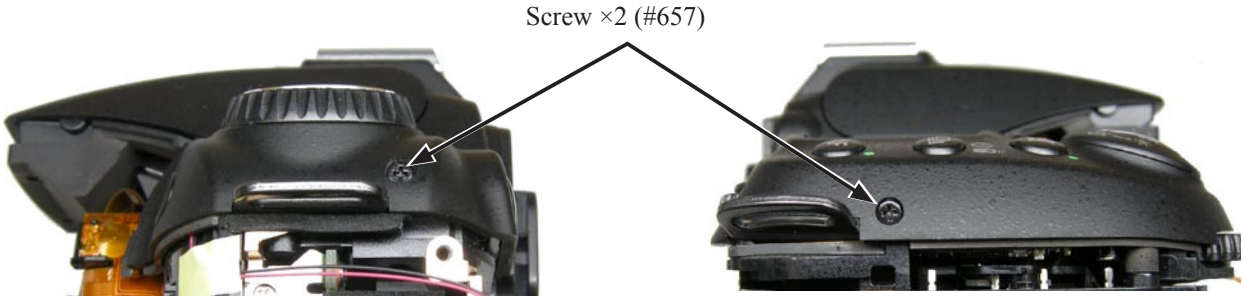

・Tighten the screw (#636).

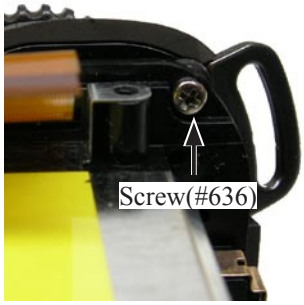

・Attach the roller (#281) to the top cover.

・Attach the sponge (#287) to the diopter adj knob (#282).

・Tighten the screw (#288).

・Attach the diopter adj knob cover (#280).

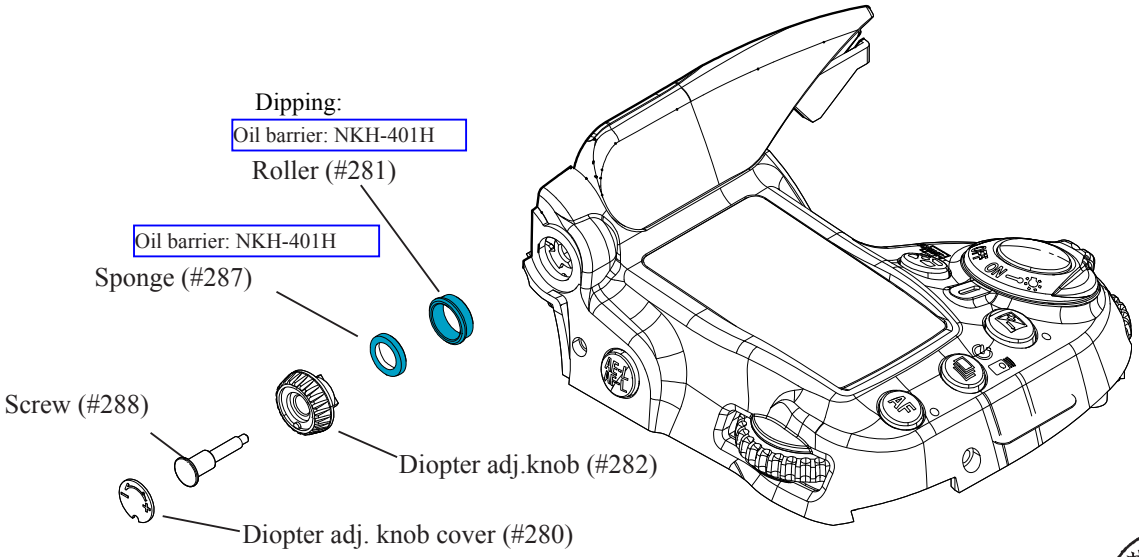

サービス計画課 M

・Solder the wires (Blue/Green/Yellow) of the preview SW unit.

・Solder the wires (Red/Black) of the main condenser.

・Arrange the wires by fitting with the bosses.

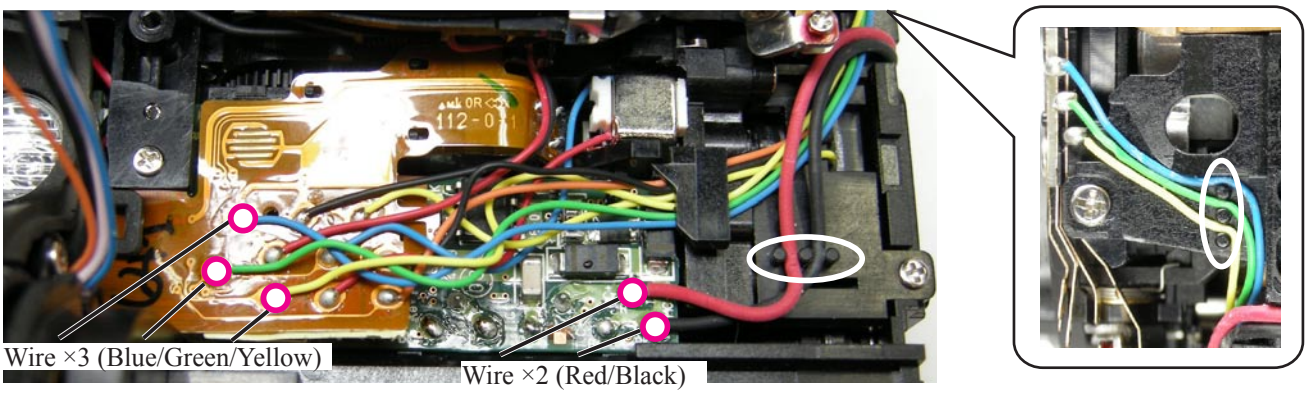

・Solder the wires (Black/Pink/Orange/Blue) of the SB.

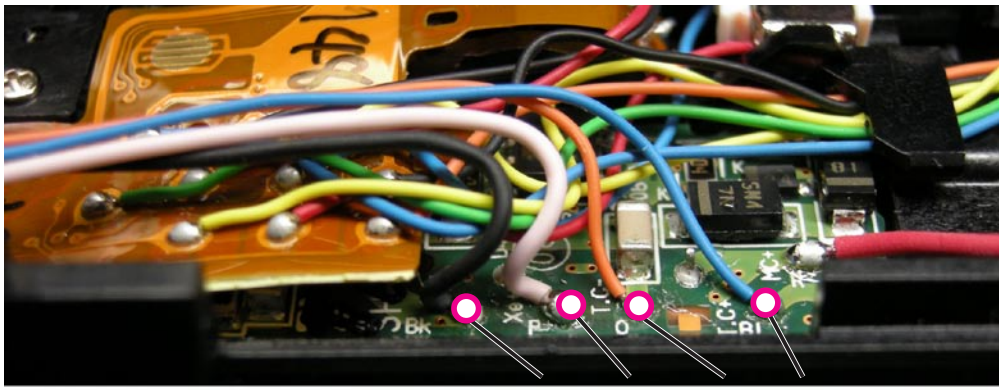

Wire ×4 (Black/Pink/Orange/Blue)

・Attach the tape (#831).

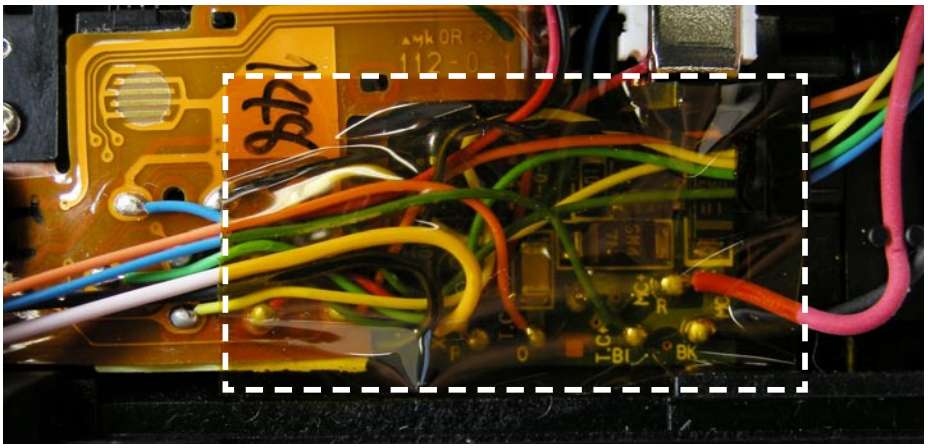

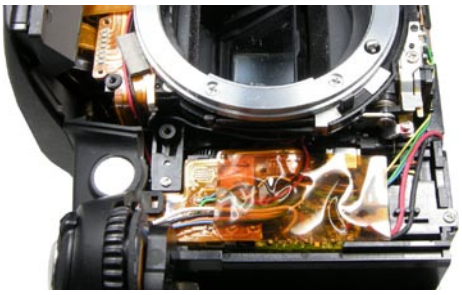

I/F cover

・Attach the tape (#755) to the IF cover (#B28).

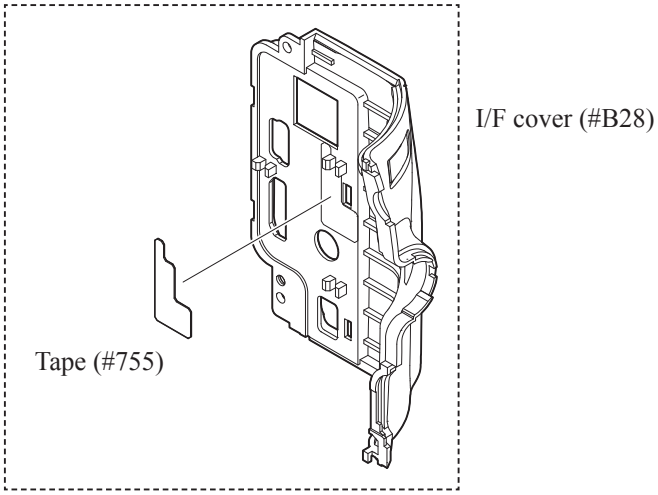

・Push the wires of microphone to sides carefully not to pinch the wires.

・Mount the IF cover (#B28).

・Mount the IF cover (#71) and the cable release cover (#70).

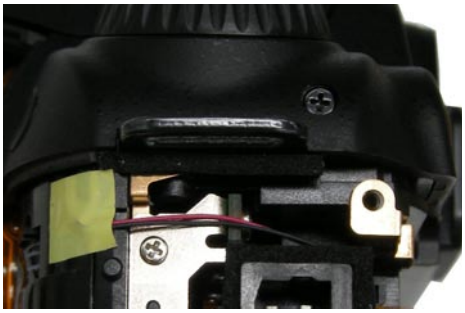

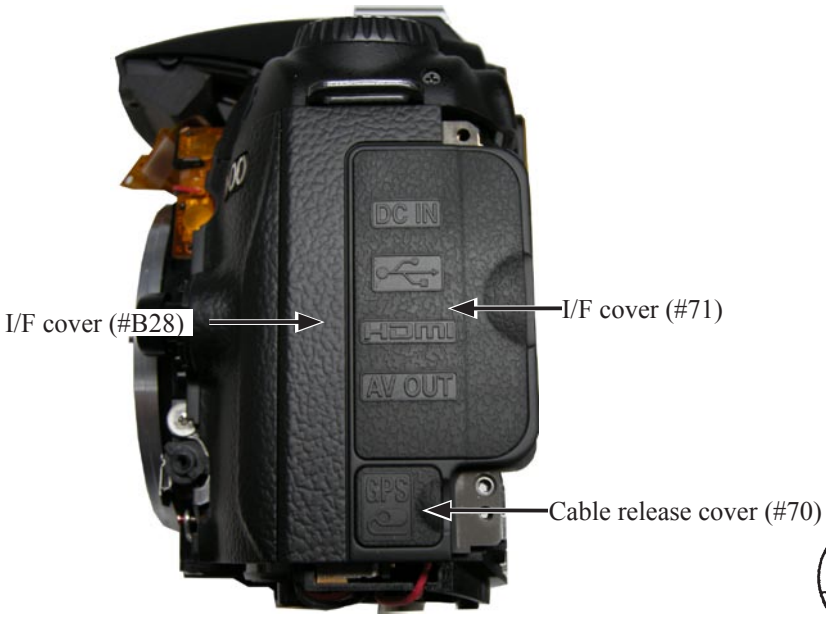

サービス計画課 M

Grip rubber unit

- Attach the grip red mold (#29) to grip rubber unit (#B26).
- Attach the spring (#161) from behind, and tighten the screw (#638).
- Attach the button (#390) and the conducting rubber (#389).
- Attach the plate (#388).
- Adhere the tape (#811).
- Adhere the tape [TA0005 (3.3 × 11)].

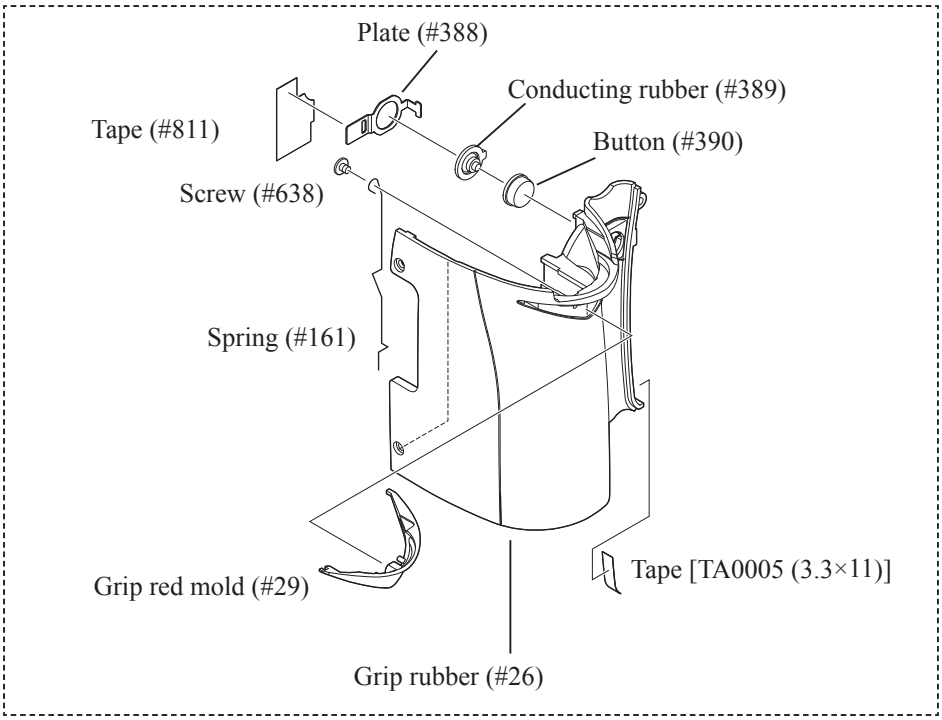

- Mount the grip rubber unit (#B26).
- Tighten the screws (#627 and #618).

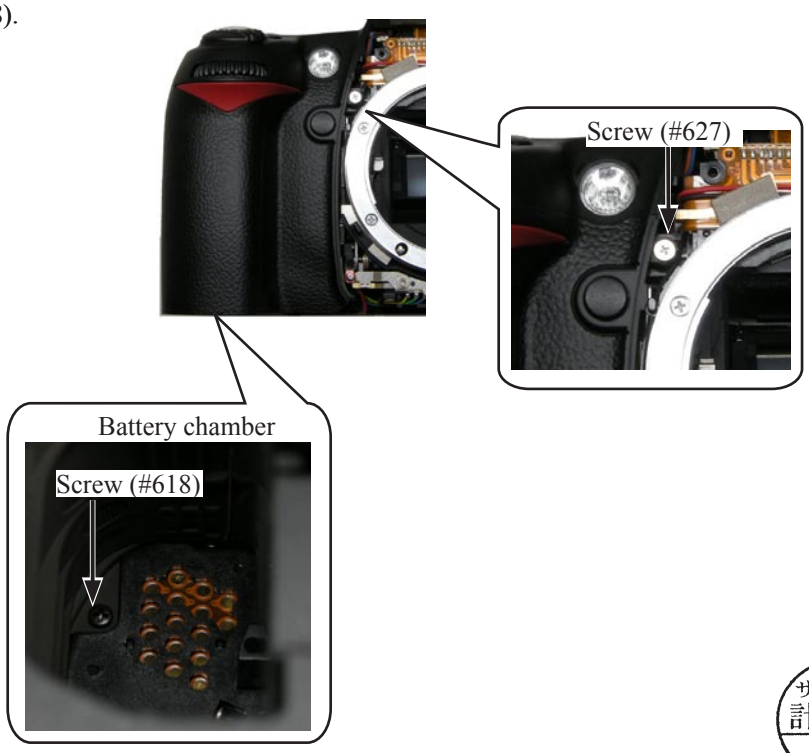

Front cover unit

- Attach the button (#391) and the button (#392) to front cover unit.
- Attach the snap ring (#387) from behind.
- Attach the spring (#201) and the button (#229).
- Attach the E-ring (#722) from behind.

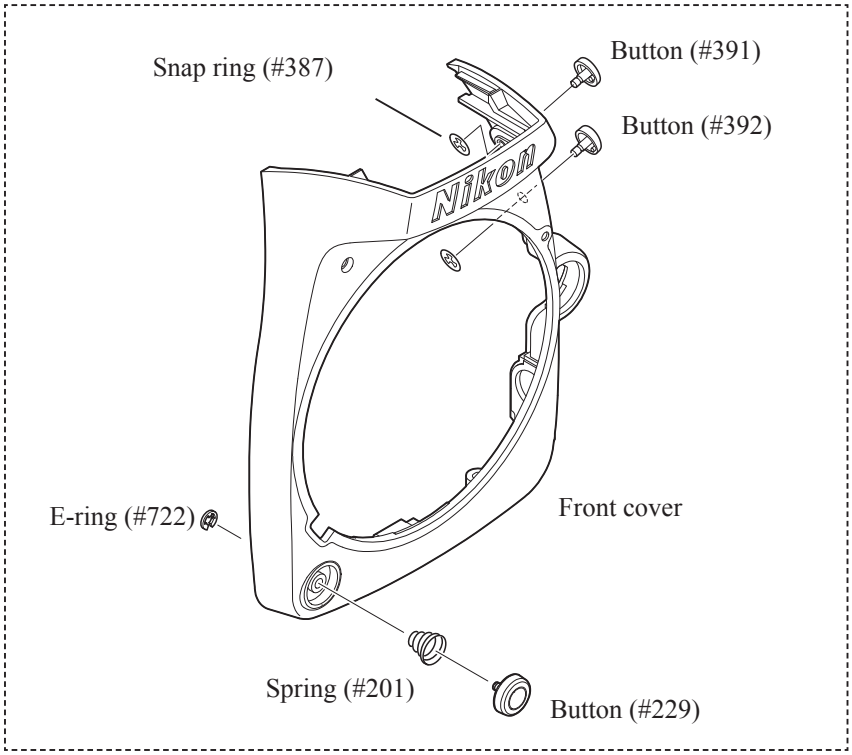

- Mount the front cover unit.

  (When mounted, the GND plate (#140) must not be placed on the front cover.)

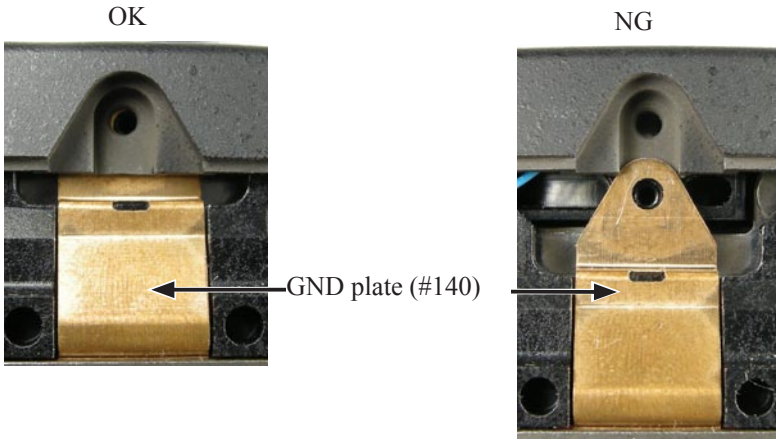

サービス計画課 M

・Tighten the two screws each (#613 and #611).

A/M cover plate

・Attach the A/M select lever (#121), and tighten the screw (#659).

・Mount the A/M cover plate (black) (#124) to be positioned for pointing to indexes correctly.

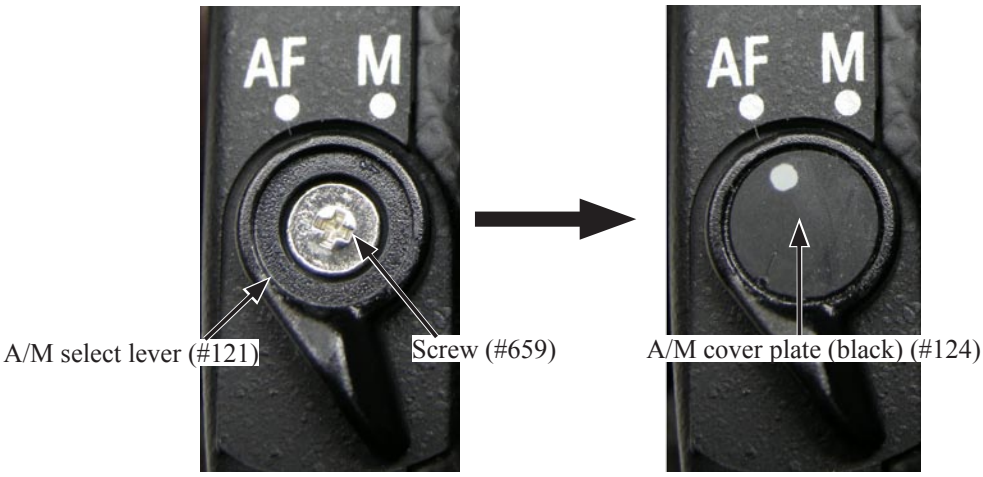

サービス計画課 M

Image sensor unit

・Position the image sensor unit (#B1051) in the direction of the red arrow, and mount them. Then, tighten the three screws (#680) in numeric order.

Caution: Some bodies have lumirror sheets (#62) and washers (#63) already attached. (ref. Page A46)

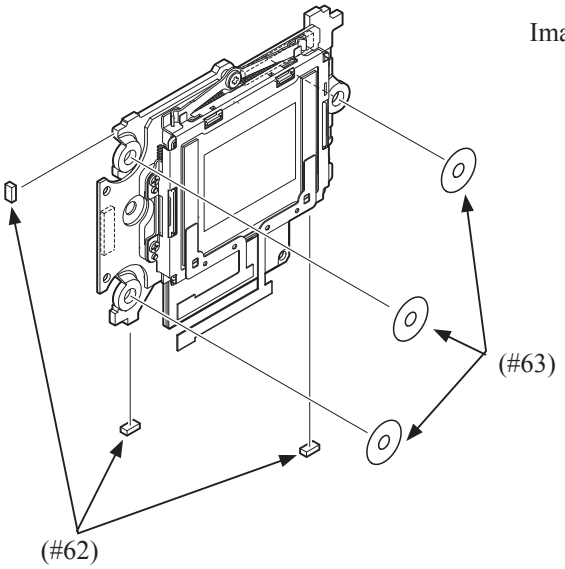

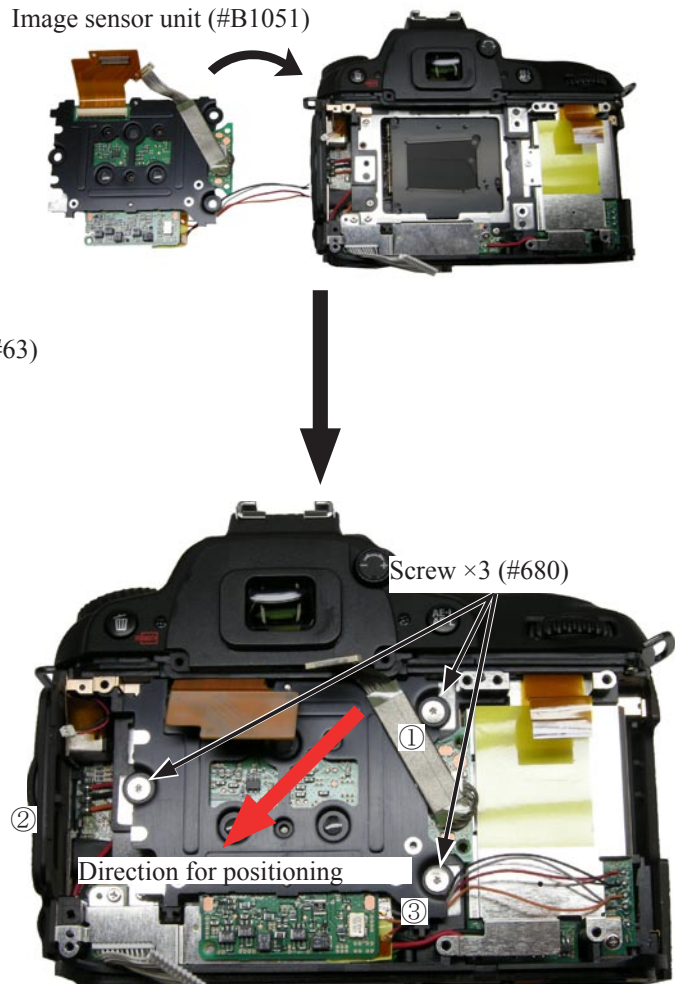

・Solder the wires (Red/Black/Orange/Gray).

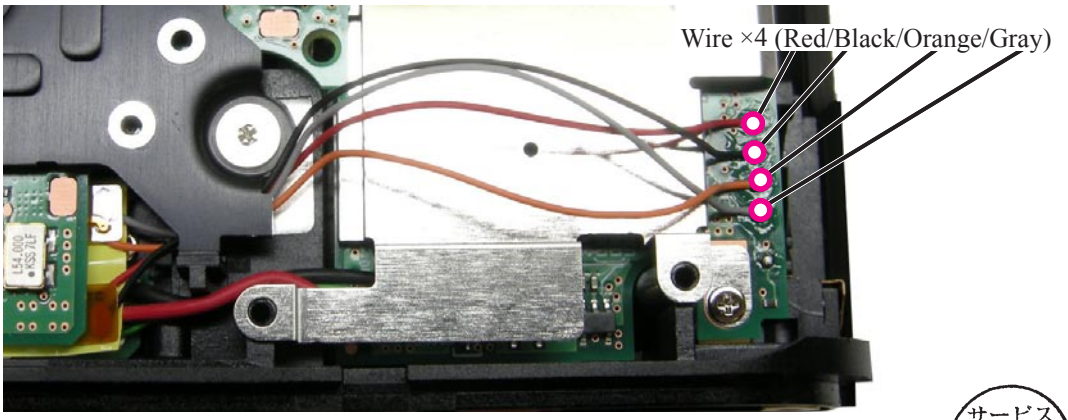

サービス計画課 M

DG PCB unit

・Connect the connector of the microphone.

・Attach the gaskets (#480, #481 and #487).

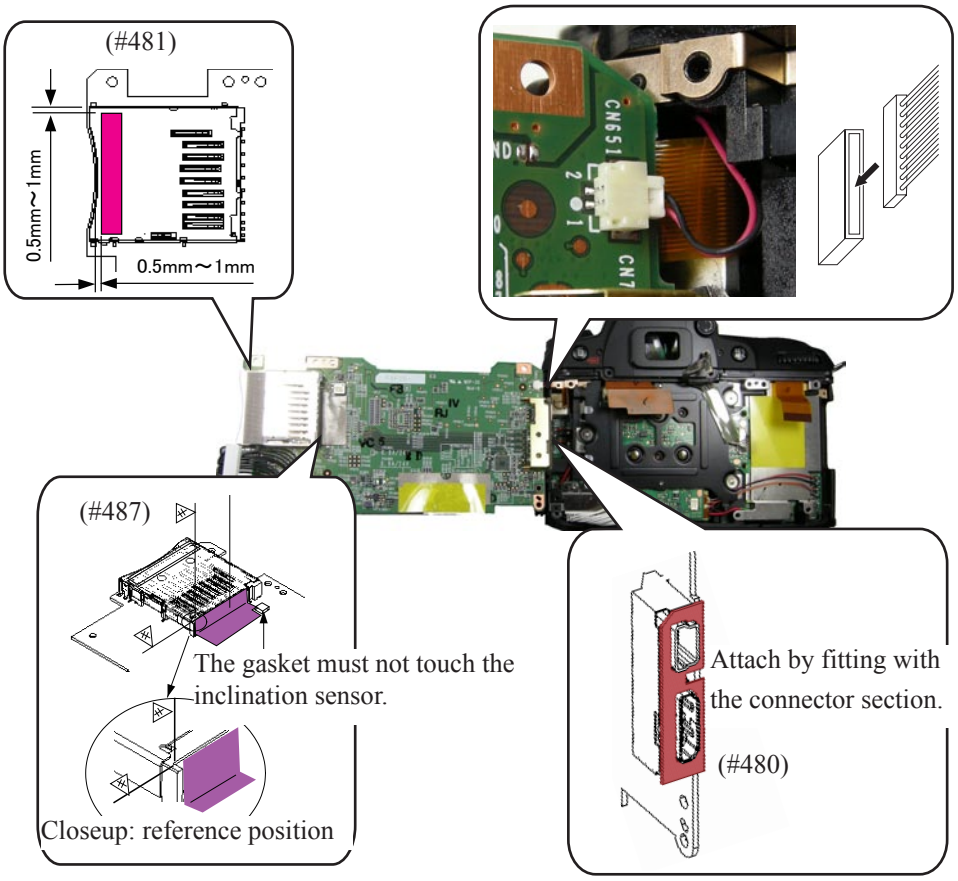

・Mount the DG PCB unit (#B1031) by fitting with bosses.

・Tighten the two screws (#683).

・Connect the three FPCs and the two harnesses.

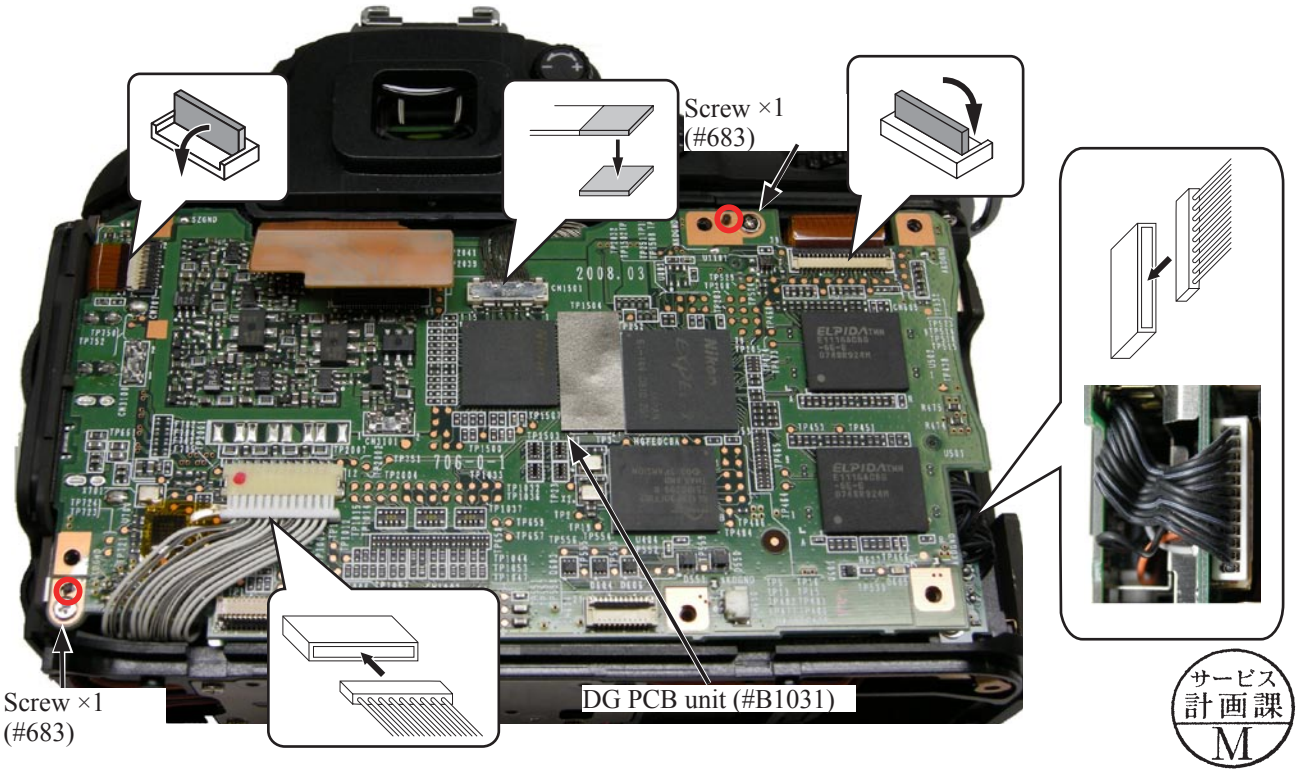

サービス計画課 M

Inspection and adjustment of AE CCD positioning

⚠ WARNING

- There are high voltege parts inside. Be careful of this electric shock, when you remove the cover.
- You must discharge the main condenser according to the instruction of this repair manual after you remove the cover.

＊ Under the environment where the AE-CCD positioning is adjusted, use the reference body and confirm results.

- In case the measured value is out of standard, check whether there is no deviation of the focus area positioning.
- In case the measured value is out of standard, change the environment of measurements. (e.g. setting place/direction, room brightness, etc)

Procedure

① While mount the top cover not by tightening the screws but by only connecting the FPC, make temporary assembly of the grip cover and I/F cover into the bottom cover (with tripod attached) with four screws.

② Mount "AF50/1.4D" on the camera, and fix them on the tripod horizontally.

③ Connect the camera and PC via USB cable (UC-E4).

④ Connect the AC adapter EH-5.

＊ Be careful NOT to cause a short-circuit at uncovered portions.

⑤ Attach the AE-CCD positioning tool (J63108) in the color viewer (J63070), and turn power ON.

⑥ Keep the 0.7-m distance between the front face of the AE-CCD positioning tool and the reference surface of the camera. Set the camera AF to manual, and rotate the focus ring to set to "0.7 m".

⑦ Start up the inspection and adjustment software for D90 (J65126), and select "Inspection and Adjustment for AE CCD POSITION" then "Set Camera for AE CCD POSITION" to display the focus areas.

Looking through the viewfinder, move the camera so that the focus areas are positioned on the AE-CCD positioning tool as below Fig.

＊ Set the camera and AE-CCD positioning tool horizontally.

⑧ Select "Inspection and Adjustment for AE CCD POSITION".

＊ Cover the camera with a black cloth, etc, when measured.

⑨ Place the metering FPC unit and turn the three screws (#514) until they are lightly attached, and then give them 1.5-turns counterclockwise. By following the instructions on PC, adjust the AE-CCD position by using the screws [a (#514) and b (#514)].

⑩ Fix the three screws with the screwlock.

⑪ After completing the adjustment, secure the top cover with the screw, and inspect accuracy. If the result does not meet the standard, make the readjustment.

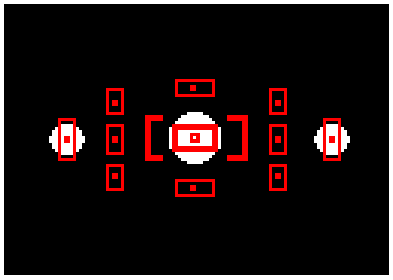

Fig.

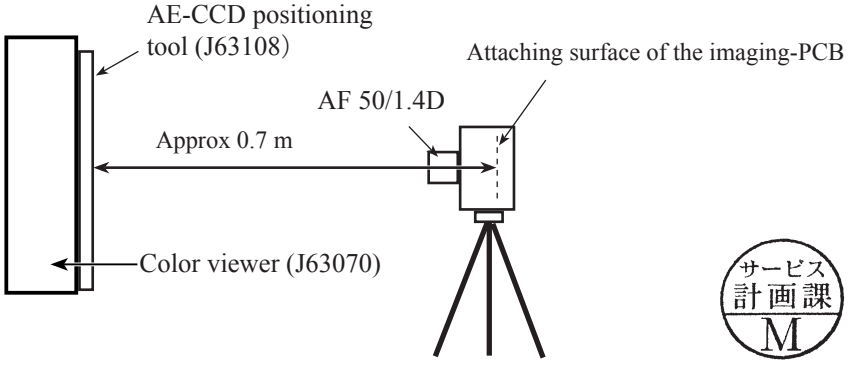

サービス計画課 M

Reference→ Reference screw

X direction → a: screw

Y direction → b: screw

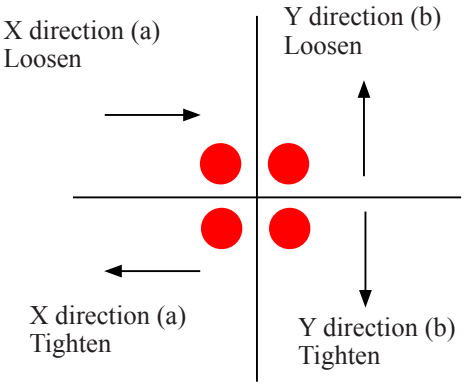

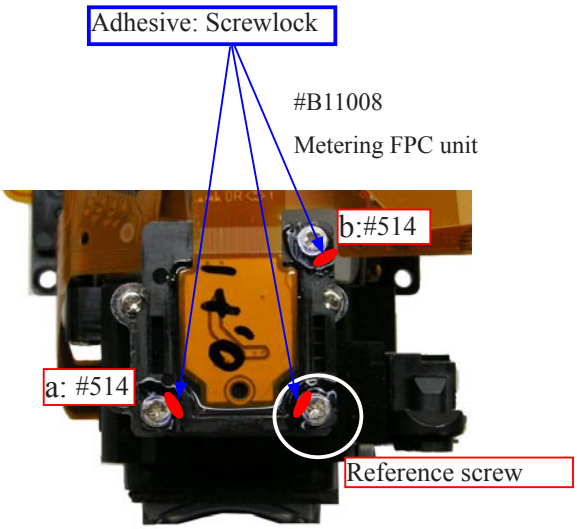

Discharge of main condenser

・From the both terminals of the main condenser, discharge electricity.

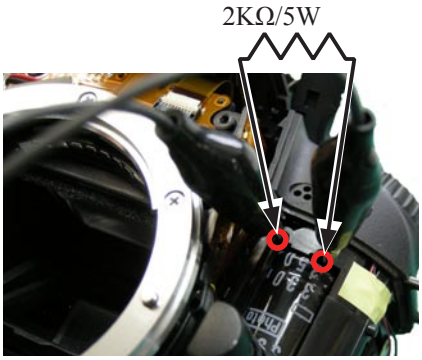

Inside of round hole

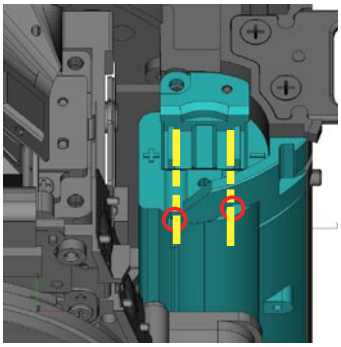

サービス計画課 M

Battery check voltage inspection 〈RS232C connection〉

For measuring consumption current value with this camera, attach the battery tool (J61213), and arrange the wires as below.

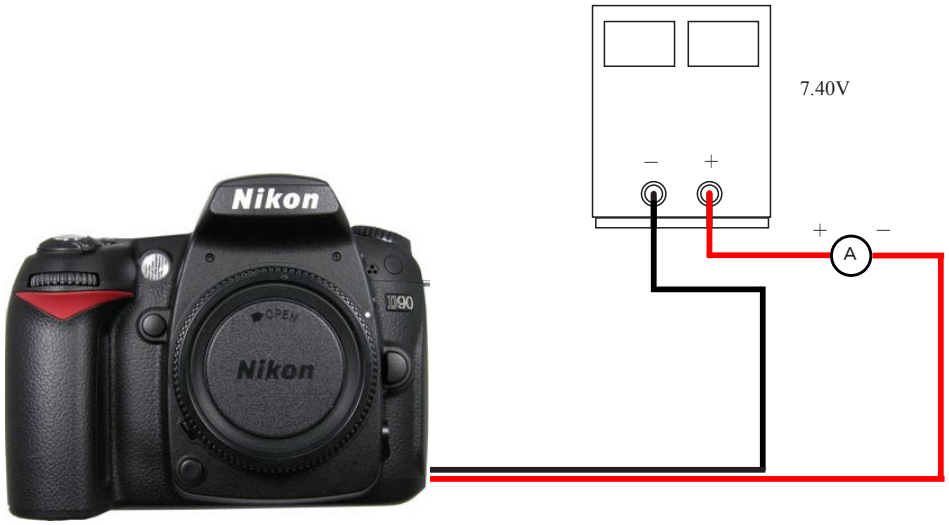

Device

 POWER SUPPLY (10V 5A)	J61213  BATTERY TOOL	

サービス計画課 M

DG shield plate

- Mount the shield plate (#78) and the shield plate unit (#B79) carefully not to damage the clip.
- Tighten the six screws (#683).
- Connect the FPC of the DG-PCB unit.

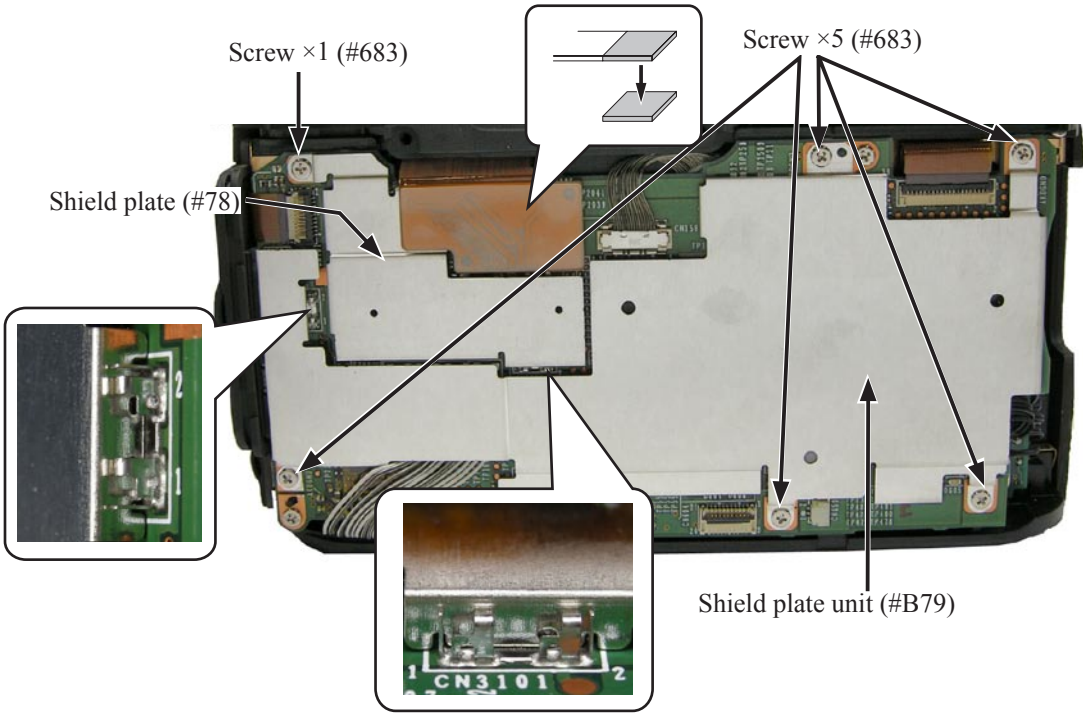

Speaker unit

- Mount the speaker unit (#B45), and tighten the two screws (#612).

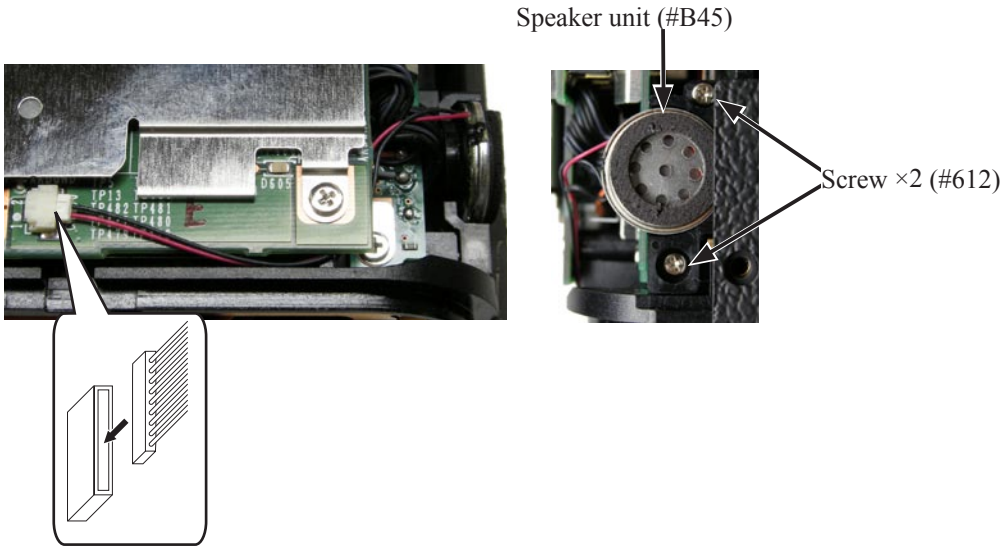

Accuracy inspection and adjustment (Camera body exc. Imaging)

★ : New tool
Commercially available straight cable

AC adapter: EH-5

USB cable: UC-E4

Stabilized power supply
Set value ＝ 7.4V　0.3Ω　5.0A
or AC adapter EH-5

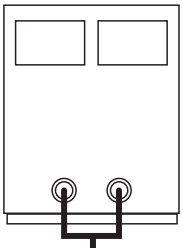

Battery tool
J61213

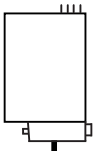

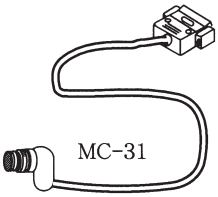

MC−31

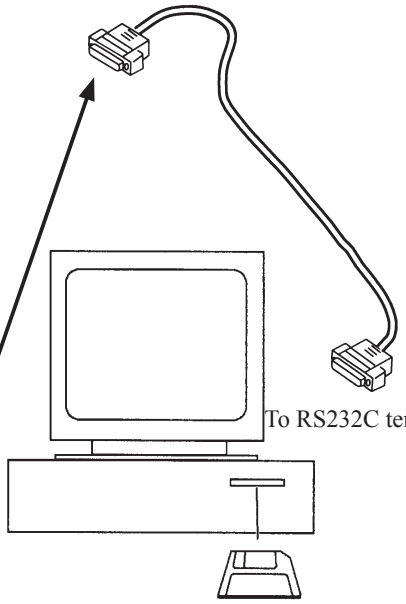

To RS232C terminal

J65216

★
D90 inspection and adjustment software

Use [9pin-25pin] conversion connector for a computer with 9-pin RS-232C terminal.
RJ is not available, so use a commercial item.

＊ Note:
When inspecting/adjusting the shutter speed and when adjusting “battery check” voltage, be sure to use the battery tool (J61213).
When communications are made by RS232C, supply power from the battery tool.
SW-ON sets to communication mode.

D90 Inspection and Adjustment Software (J65119)

This inspection and adjustment software runs on Windows.
Install the software by following the below procedure.

<Operating environment>
Check the following operating environment which is required for installing this program on PC.

PC	IBM PC/AT compatible
OS	Windows XP Professional Edition, Windows XP Home Edition, Windows Vista, Windows2000,
CPU	Pentium II 300MHz
RAM (memory)	256 MB or more
HD	6MB-or-more free disk space is required when installing
Monitor resolution	1024 × 768 pixels or more
Interface	※ USB interface (V1.1, 2.0) RS232C (com1- com9)

As long as the above hardware requirements are met, any PC such as desktop or laptop, etc is available.

＜ Cautions in starting program ＞
When starting this program, close all the other applications.
If some other applications are running, this program may not be activated.

＜ File ＞

D90.exe	Application execution file
NkdPTP.dll	Library file: USB communication application extension file for Windows XP
NkdPTPDi.dll	Library file: USB communication application extension file for Windows 2000
PTPControl	Driver file storing folder for PTP: for Windows 2000
D90IA.ini	File for storing setting conditions of adjustment software

<Procedure for installation>

Because this is the self-extracting file, decompress the file before installing, and follow the next procedure.

1. Create a folder for installation under any drive and name. C: ￥DeskTopLauncher\D-SLR\D90

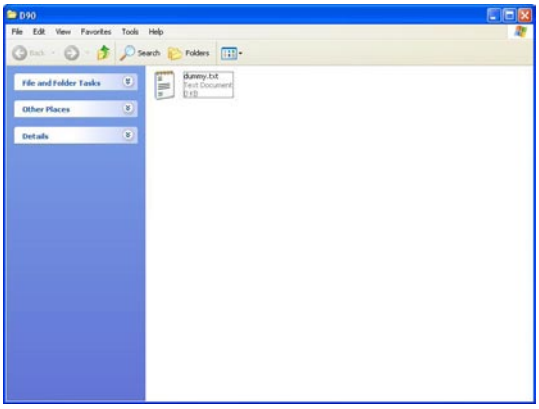

2. Paste the file (PD90.EXE) in the created folder.

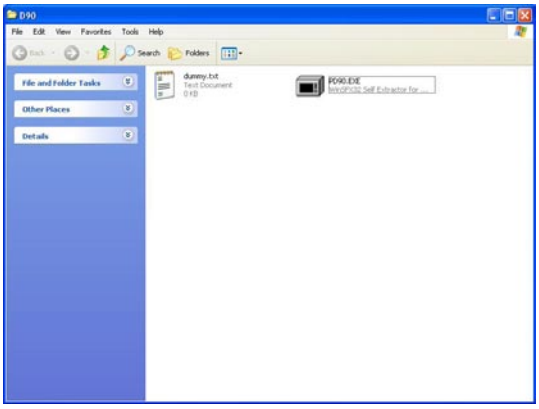

3. Double-click on the pasted file to display the following screen.
   Press the OK button, then decompression starts.

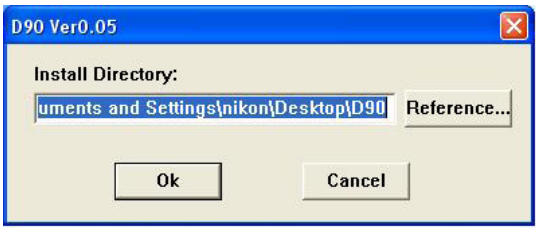

4. When the decompression of file is finished, the file (D90.exe) is created.

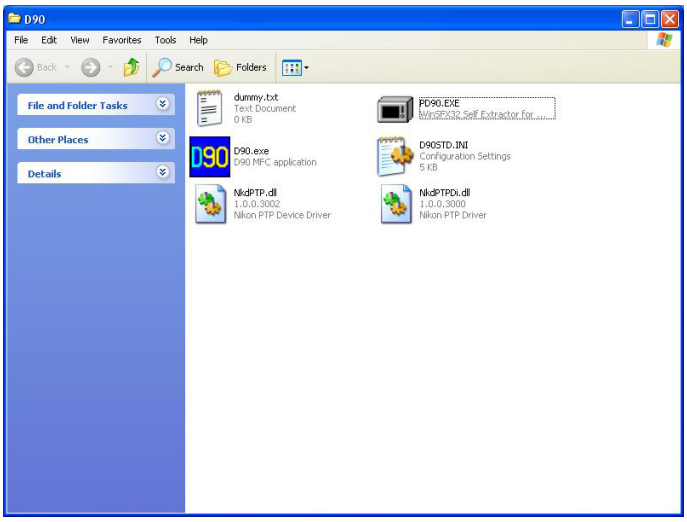

5. The install is completed.

【Start-up of Program】

1. When "D90. EXE" is started, the following window will appear. So type in the user key.
   (ref. TIE07023)

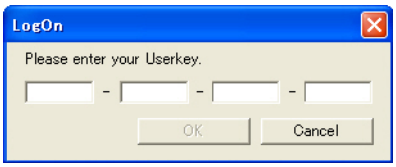

Caution:

Once the user key is typed, from the next time, the adjustment screen will appear from the beginning.

2. Then the following window will appear. Click "OK".

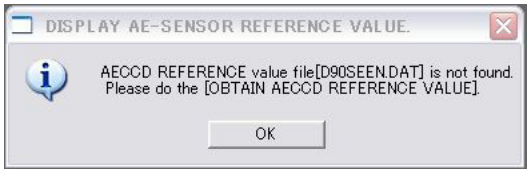

3. Click "OK". Program will start.

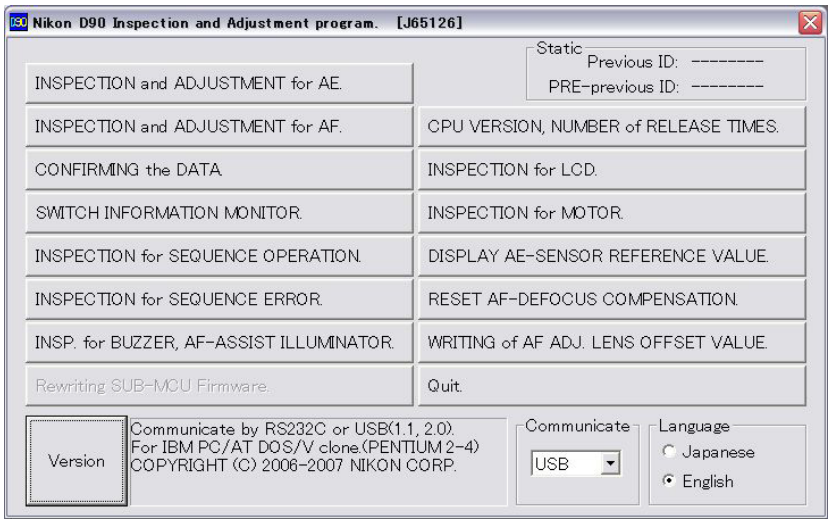

4. To display in Japanese, select the radio button of "Japanese" in "Language" at the lower right corner of the screen. However, the screen will not be displayed correctly by English OS.

5. To end the program, click "Close (×) " button at the top right hand corner of the screen or click "Quit".

※ When the camera body (excluding imaging) is inspected and adjusted, the USB connection will be reset in the process of writing the data into the camera. Therefore, the following message will appear but does not affect the adjustment. Click "Cancel", and proceed with the next.

Procedure for installing USB driver

If this program is used by the USB interface, installing the USB driver is necessary.

<u>But if the OS is "Windows XP", the driver is already preloaded so it is not necessary to install it.</u>

(1) Connect the camera and PC by USB cable.
Turn camera ON.

(2) When "Add New Hardware Wizard" is displayed, click "Next".

(3) Select "Search for a better drive than the one your device is using now. (Recommended)", and click "Next".

(4) Click "Reference" of "Specify a location" and select the directory where the driver was copied, such as "C: ¥D90¥PTP". Then click "Next".

(5) Confirm that the driver is located at the right place, and click "Next".

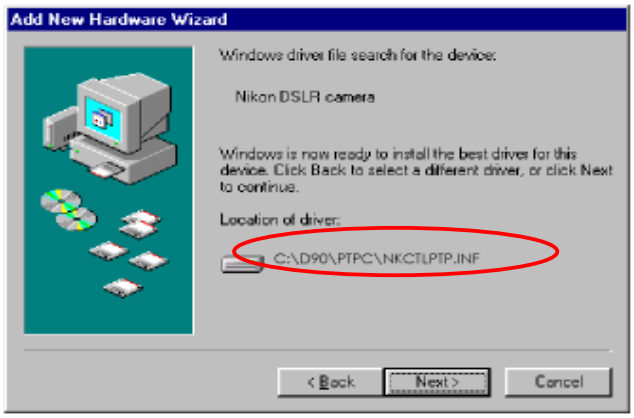

(6) Click "Finish".

(7) Reboot the PC to complete the installation.

Necessary adjustments when parts are replaced

D90 adjustment software and updates

Adjustments / Replacement parts	EEPROM initial value writing	AE CCD positioning adjustment	AE accuracy inspection & adjustment	Aperture accuracy inspection	Battery check voltage level adjustment	Built-in SB light volume inspection & adjustment	AF accuracy inspection & adjustment
Shutter unit							
Main FPC ＊1	○	＊2 △	○	○	○	○	○
Sub-PCB							
AF sensor unit							○
Top cover or SB lower case unit						○	
DC/DC PCB unit					○	○	
Metering FPC unit		○	○				
Aperture control PCB unit				○			

＊1. When the main PCB unit is replaced, be sure to update the version before writing the initial values.

＊2. Make inspection.

AE inspection and adjustment

Inspection and Adjustment for AE ACCURACY

When MAin PCB is replaced.

Writing in Initial values.

Inspection and Adjustment for AE CCD POSITION.

Inspection and Adjustment for AE SENSOR .

Inspection and Adjustment for AE ACCURACY.

Inspection and Adjustment for APERTURE CONTROL ACCURACY.

Inspection and Adjustment for BUILT-IN SB LIGHT VOLUME .

Adjustment for Battery Level Check.

All the adjustments will be made sequentially.

When MAin PCB is not replaced.

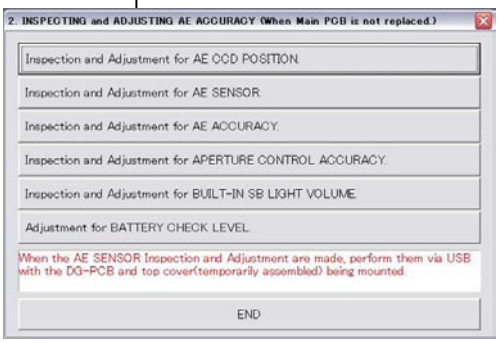

Select adjustment items individually.

Caution:

When the main PCB is replaced, write the initial values, and update the version. Then, write the initial values again.

① AE-CCD positioning inspection/adjustment (For device and details, refer to Page A69.) 《USB communication》

② Inspection and adjustment of AE sensor 《USB communication》

Caution: Whenever the shutter unit is disassembled/replaced or the main PCB is replaced, make this adjustment.

When performing "obtain of AE sensor reference value", set the metering mode to "Multi-pattern".

Device

 J19123 SHUTTER TESTER EF-1 (CE)	 LENS AF50/1.4D

③ Inspection/adjustment of AE accuracy 《USB communication》

Caution: Regarding AE accuracy, inspection is not made by using exposure value with shutter tester as seen in the traditional method. The metering value will appear on PC screen.

Whenever the metering FPC unit is disassembled/replaced or the main PCB is replaced, make this adjustment.

Device

 J19123 SHUTTER TESTER EF-1(CE)	 J18267 LENS AF50/1.4D	 LENS AF28/2.8D
 LENS AF70-300/4-5.6D OR LENS AF-SVR70-300/4.5-5.6		
 EYEPIECE CAP	 BODY CAP	

④ Aperture accuracy inspection 《USB communication》

Caution: Whenever the I PCB is replaced, or the main PCB is replaced, make this adjustment.

Device

 J19123 SHUTTER TESTER EF-1(CE)	 J18267 LENS AF50/1.4D

⑤ Inspection and adjustment of built-in SB light quantity 《USB communication》

Set the distance between the camera and flash meter to 1m. Then, the built-in SB light quantity is inspected and adjusted.

Device

 FLASH METER	J18360  STANDARD REFLECTOR 1.5M ×1.5M

⑥ Battery check voltage adjustment (For device and details, refer to Page A71.) 《RS232C communication》

AF inspection and adjustment

Caution: When this adjustment software is used for the first time, prepare three D90 cameras, and measure by "Writing of AF adj. lens offset value" on the main menu.

① AF accuracy adjustment (All the adjustments items will be made in order.)

Caution: Whenever the AF sensor unit is disassembled/replaced or the main PCB is replaced, make this adjustment.

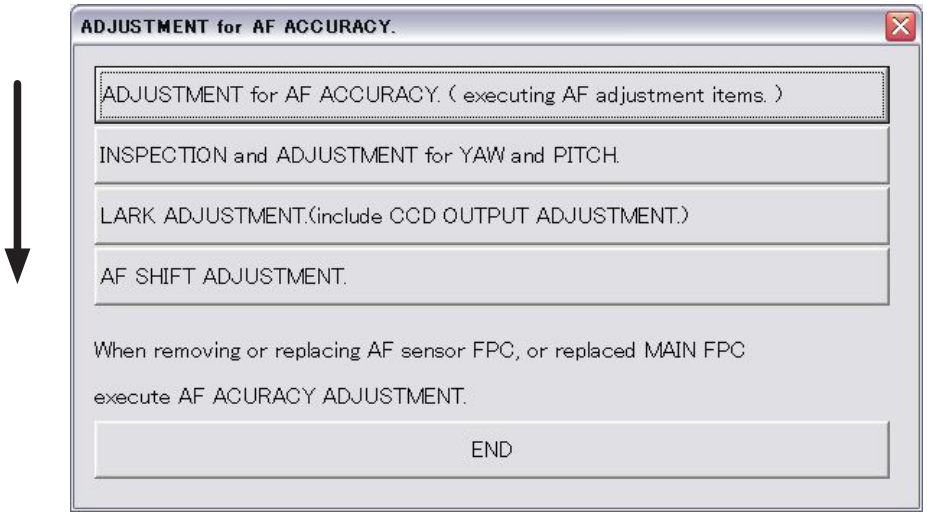

② YAW, PITCH inspection and adjustment 《USB communication》

Device

 J19123 SHUTTER TESTER EF-1(CE)	 J18230 YAW・PITCH ADJUSTMENT TOOL

③ LARK adjustment (incl. CCD output adjustment) 《USB communication》

Device

J63070  COLOR VIEWER	J18267  LENS AF50/1.4D	J15280  LENS HOLDER
J15259  AF ADJUSTING TOOL	J18266  Z ADJUSTMENT LENS (FOR 1m)	J15264  ILLUMINATION BOX FOR AF ADJUSTMENT
J18344 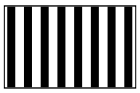 MULTI CAM 2000 AF CHART		

④ AF shift adjustment 《USB communication》

Device

J18393 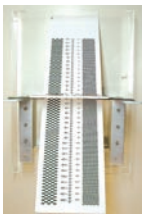 SLANT CHART	J19124 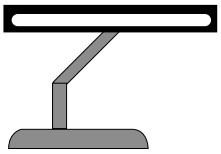 Z-LIGHT	J18267  LENS AF50/1.4D

サービス計画課 M

6.Back cover

・Attach the double-stick tape (#403).

・Attach the TFT monitor cover (#402).

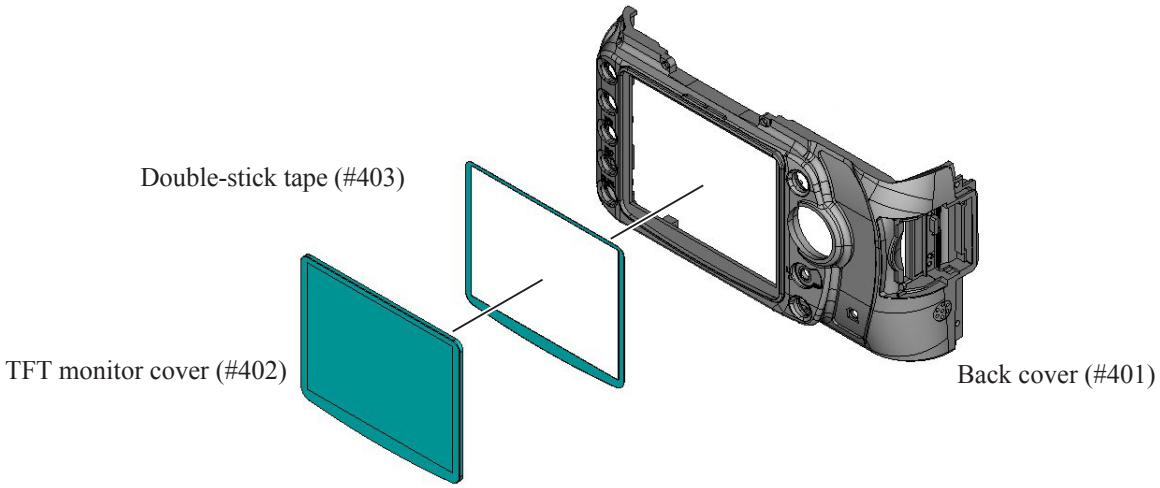

・Attach the two sponges each (#404 and #405).

・Attach the rubber (#433).

・Attach the drip proof sheet (#44).

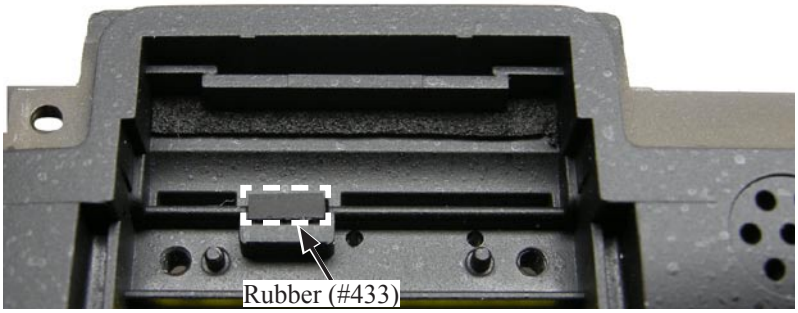

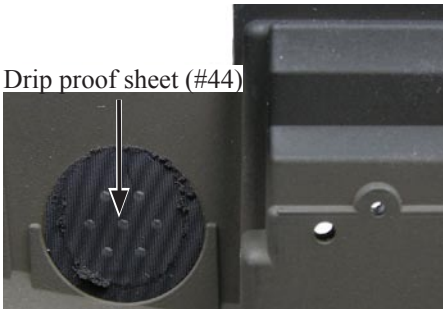

SD cover unit

・Attach the label (#436).

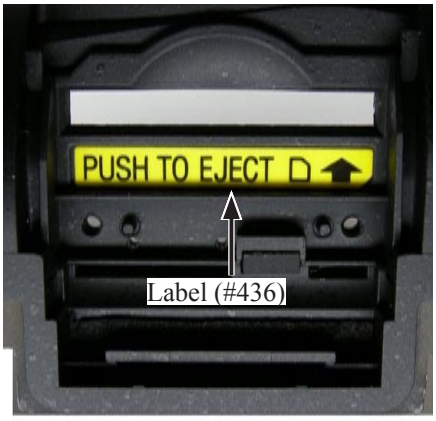

・Mount the SD cover unit (#B431) by fitting the end of spring into the hole of the body and fitting with the bosses.

・Tighten the two screws (#621).

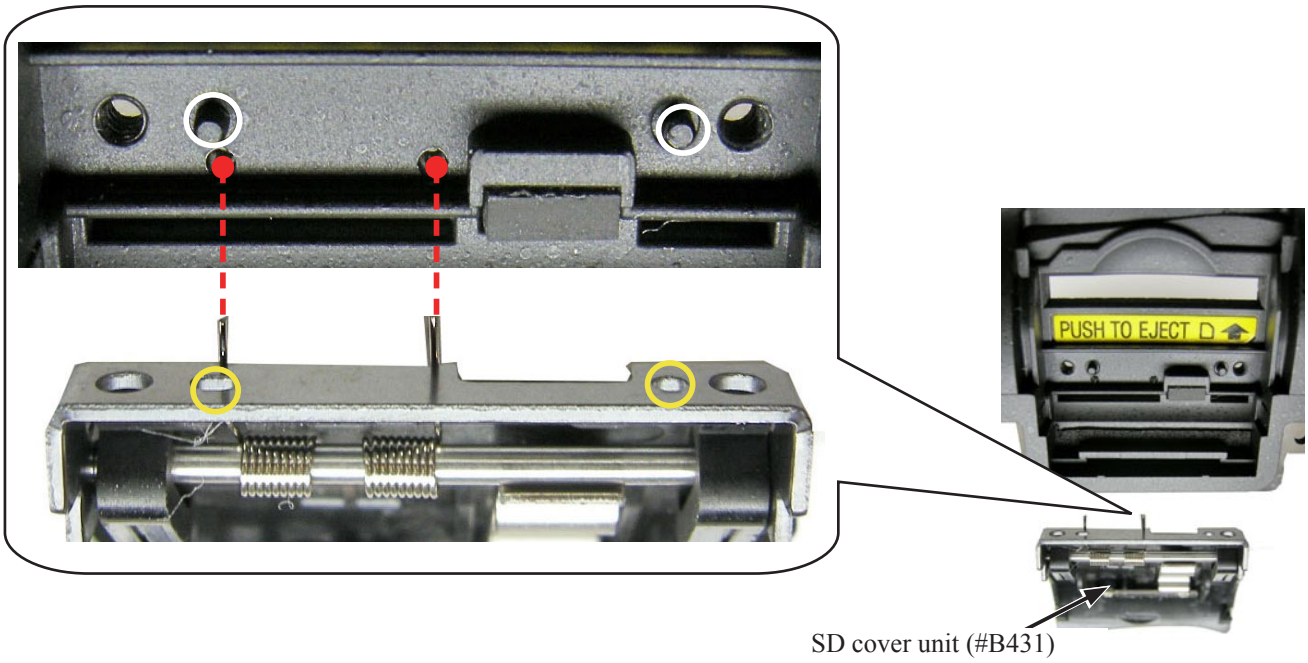

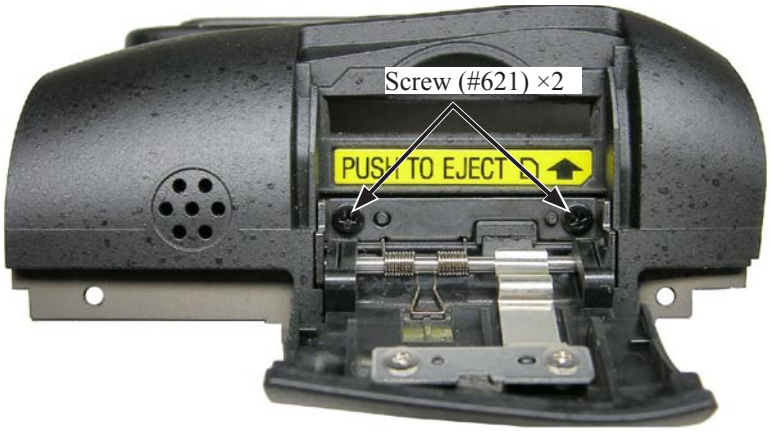

Button / SW

- Attach the selector lock lever (#416).
- Attach the selector SW unit (#B420).
- Tighten the screw (ROHS) (#707).
- Attach the multi selector (#412).
- Attach the button (#414).
- Attach the conducting rubber (#413).

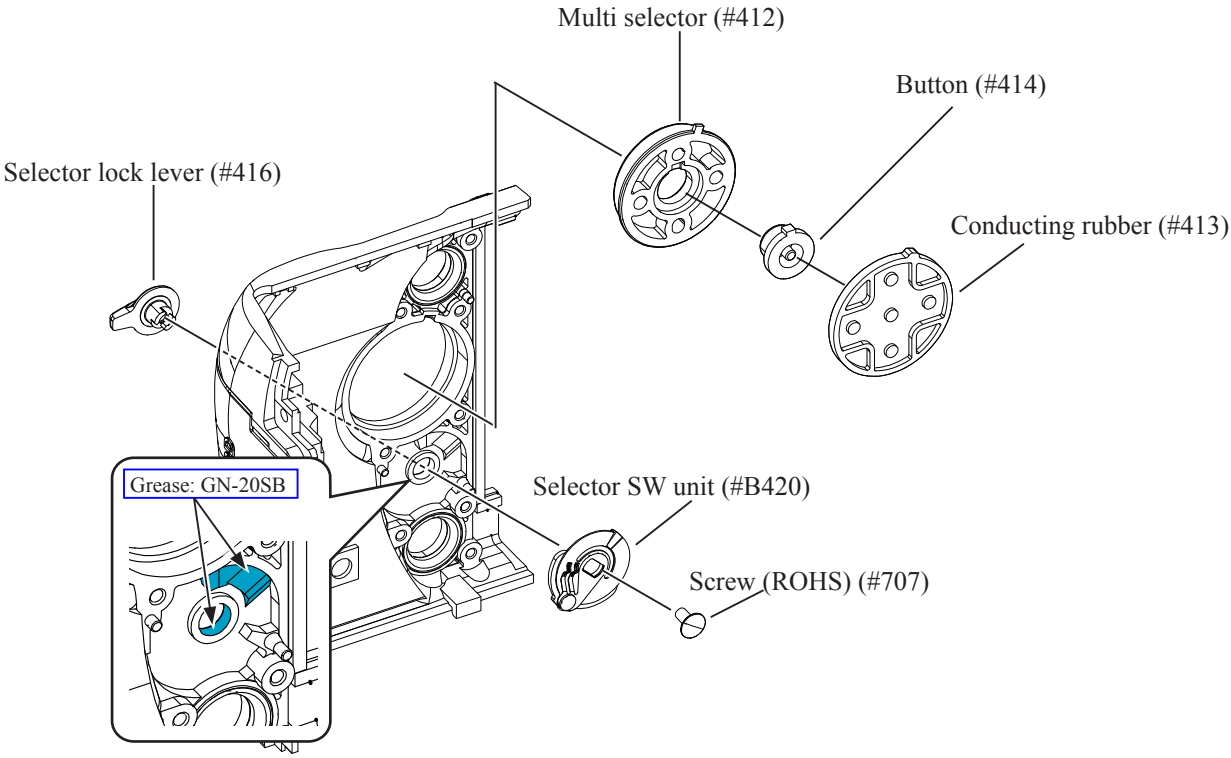

- Attach the button (#421) by fitting with the bosses.
- Attach the buttons (#429 and #430).

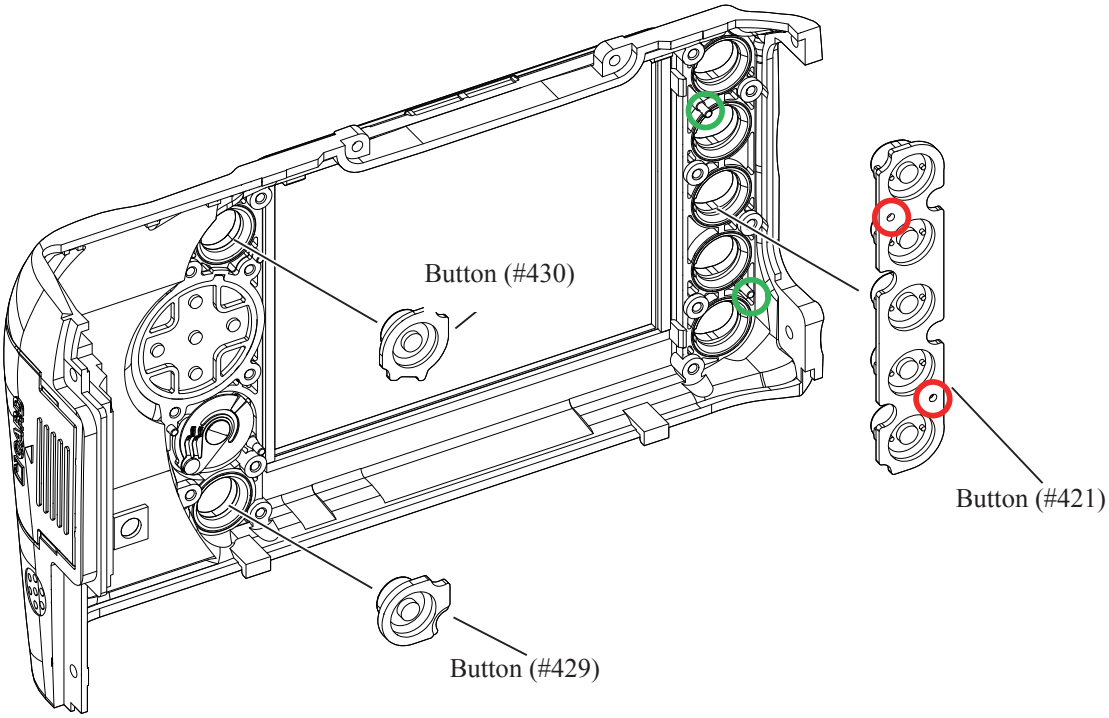

TFT monitor

- Mount the TFT monitor (#1057).
- Mount the plate (#406).
- Tighten the screw (#710).

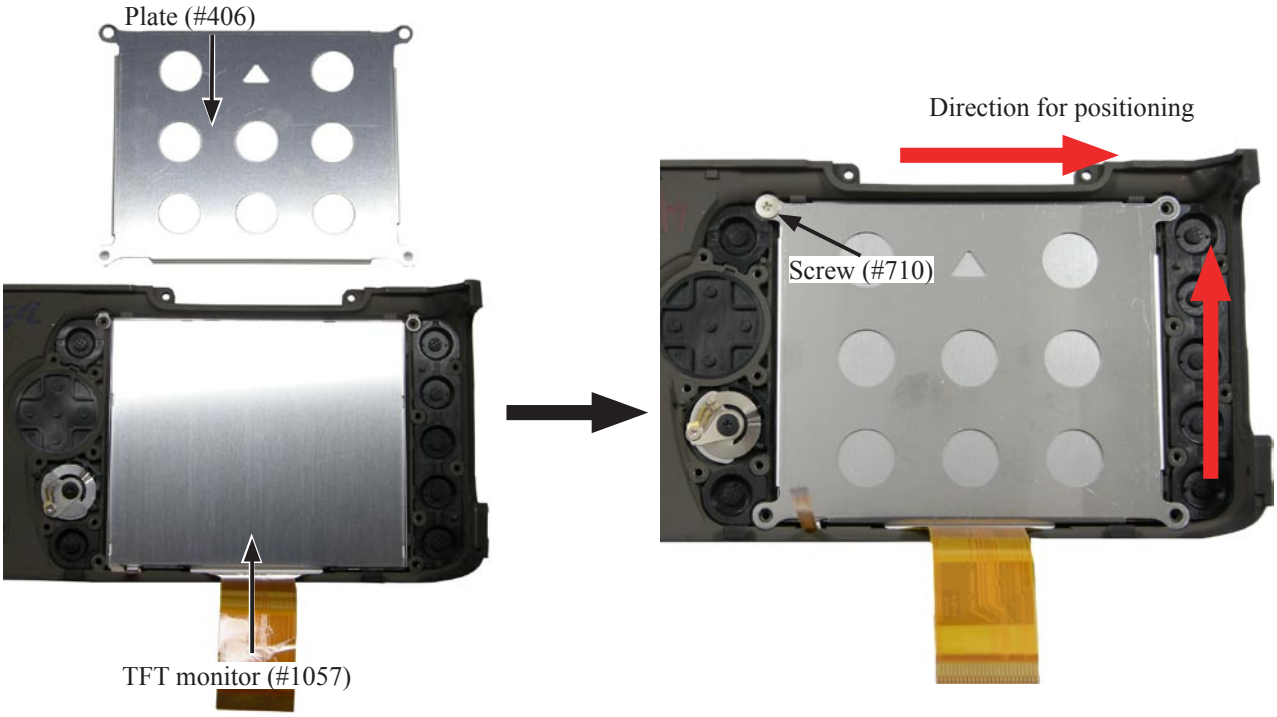

Rear display FPC unit

・Attach the double-stick tape (#423) to the back of the plate (#415).

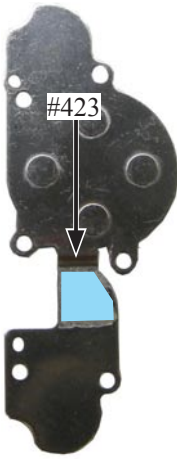

・Peel off the backing paper of [#423], and adhere it to the rear display FPC unit (#B1034) as below.

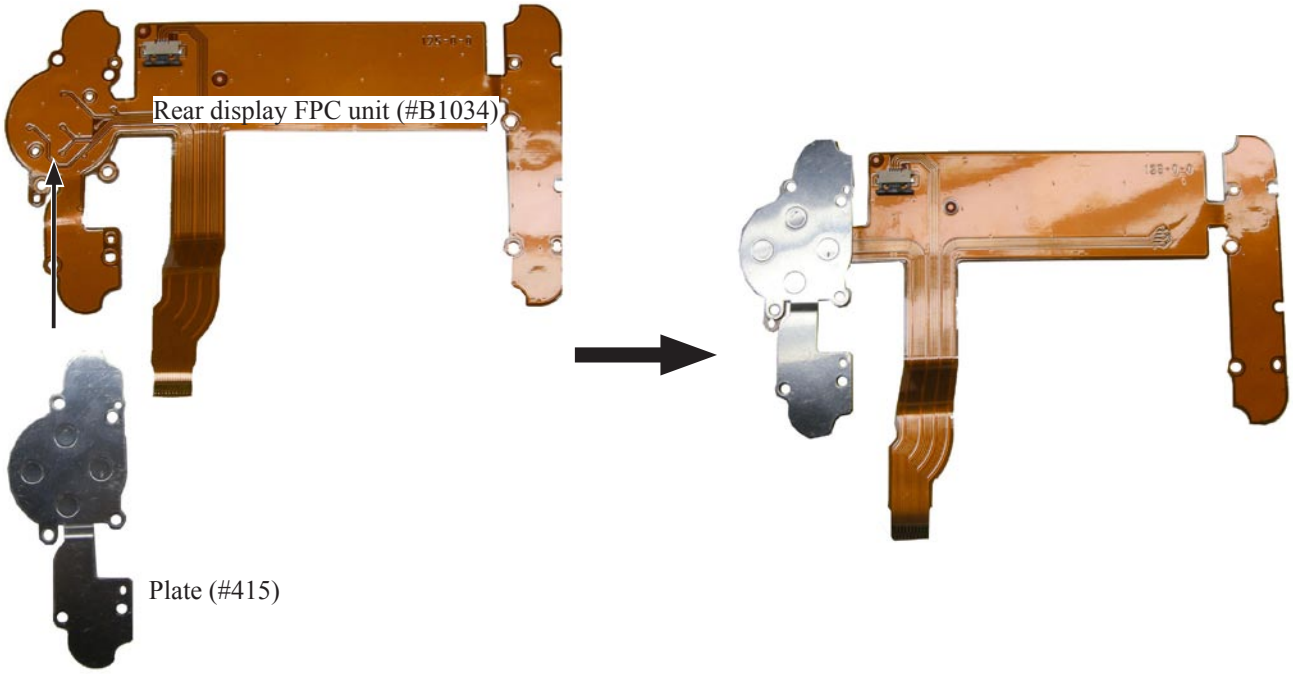

・Mount [#B1034] by fitting with the bosses.

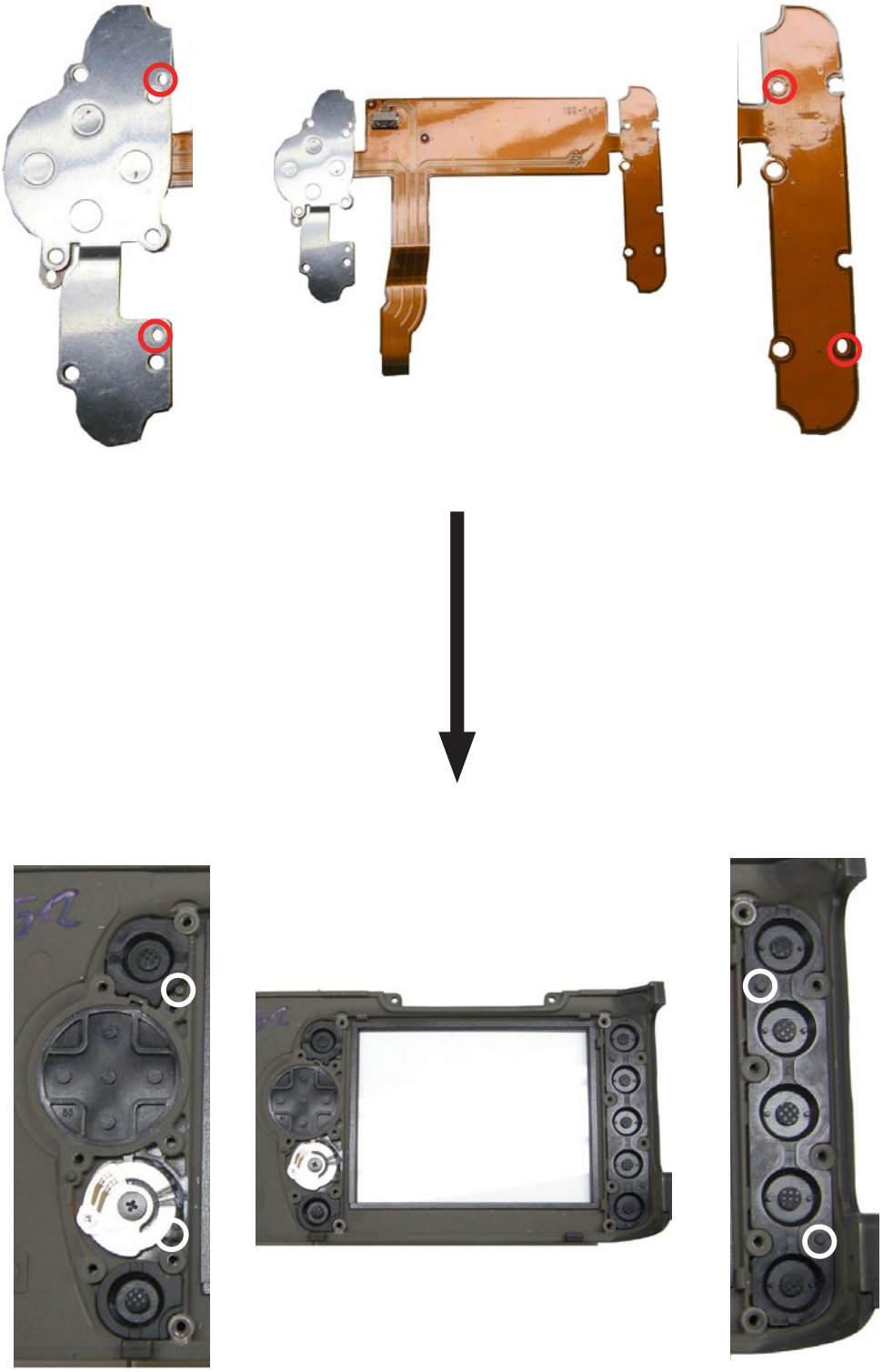

・Mount the plate (#422).

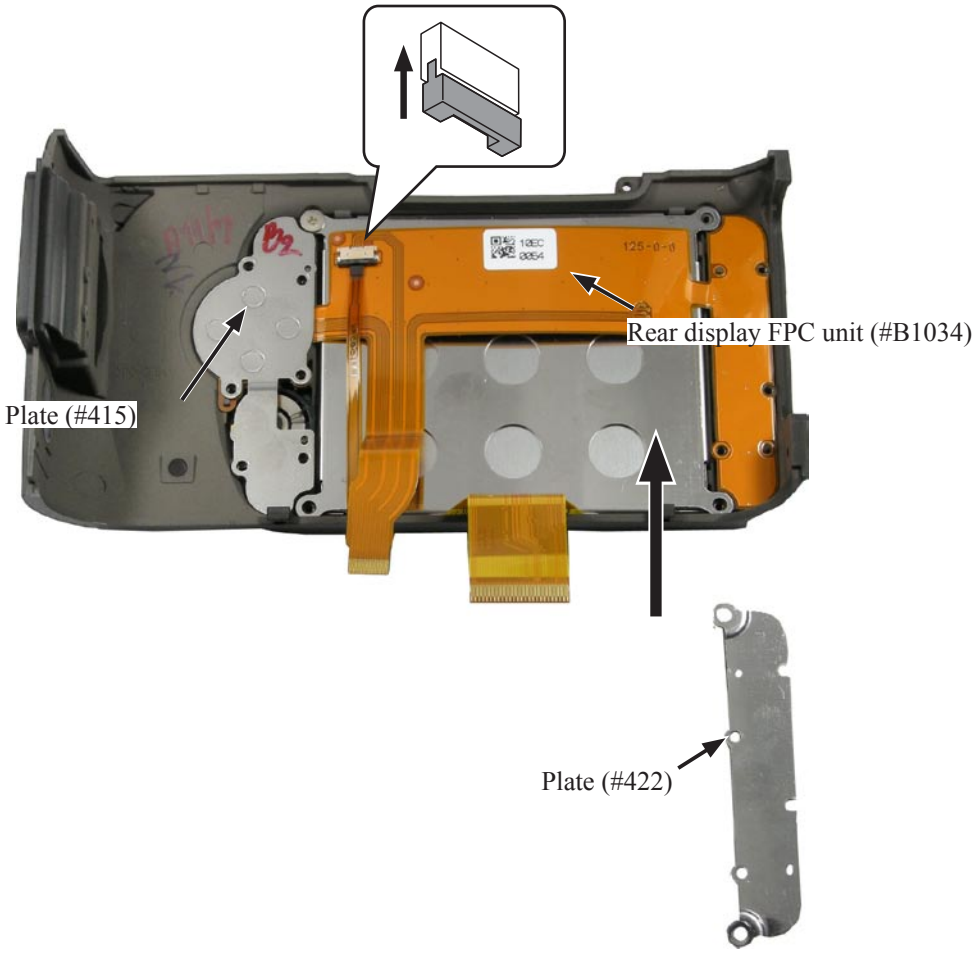

・Tighten the three screws (#710) in numeric order（①→②→③）.

・Tighten the four screws (#670) and the six screws (#670) in numeric order as below.

・Connect the connector.

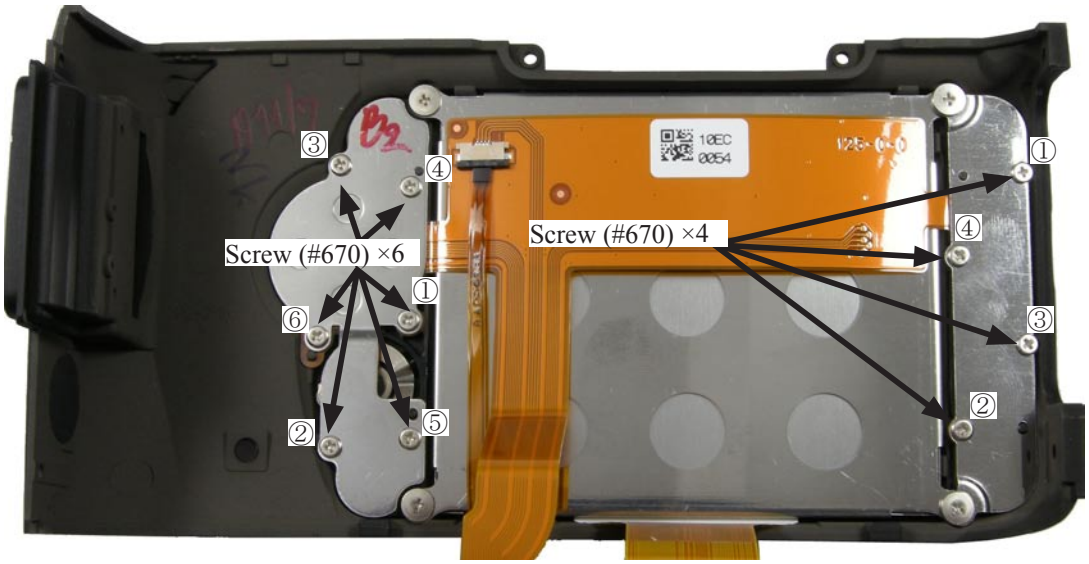

・Attach the gasket (#483).

・Attach the tape [TA0005 (12.5×12.5)].

・Attach the SD access lamp window (#408).

・Attach the double-stick tape (#409) and the cover rubber (#407).

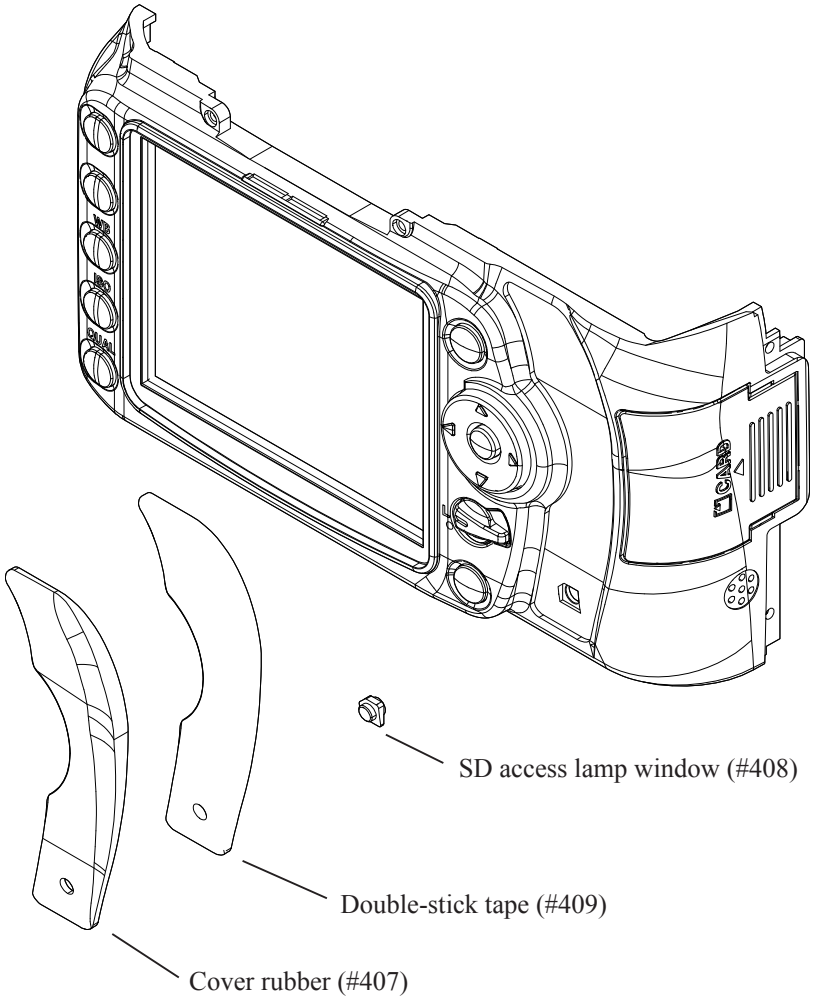

Mounting of Back cover

- Connect the FPCs of the back cover to the connectors on the DG PCB.
- Mount the back cover carefully not to pinch the FPCs.

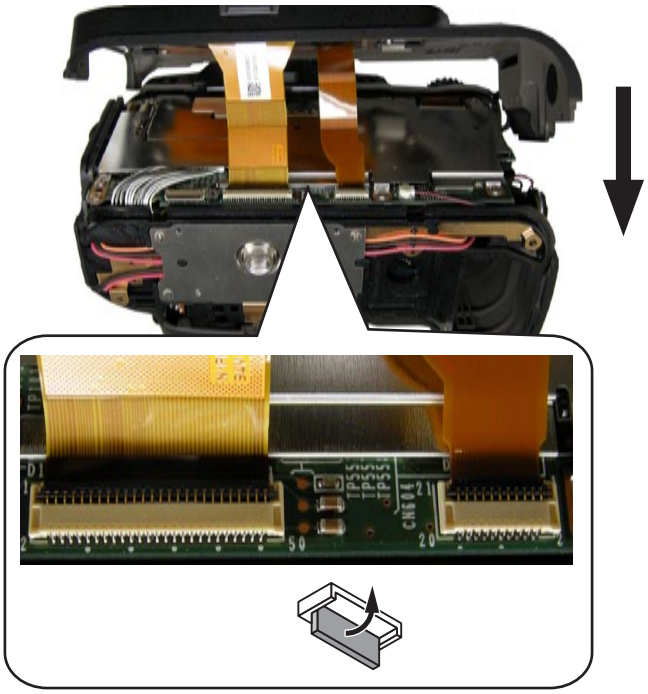

7. External area

- Tighten the four screws (#657).
- Tighten the two screws (#608).

Bottom cover

・Mount the bottom cover unit (#25).

・Tighten the two screws (#657), two screws (#658), one screw (#661), and two screws (#692) in numeric order as below.

・Tilt the battery chamber unit (#B151) at a 35-degree angle, and attach it.

Shooting-image Adjustment

1. Summary

When the D90 shooting image-related and listed parts on Page ~~A104~~ A103 △ (Revision) are replaced, be sure to make this adjustment by the shooting image adjustment software for D90 (J65127).

Use the D90 reference body beforehand, and get the reference value. Getting reference value will create the reference data "D90BSD.DAT" automatically.

Make all of the adjustment items in numeric order. They are programmed to perform continuously, so when one item is completed, the software automatically moves on to the next item.

If the adjustment is interrupted by "NG", the adjustment item can be restarted halfway from the "NG" item, and the adjustment of items which ended with "OK" have been completed.

2. Adjustment software function

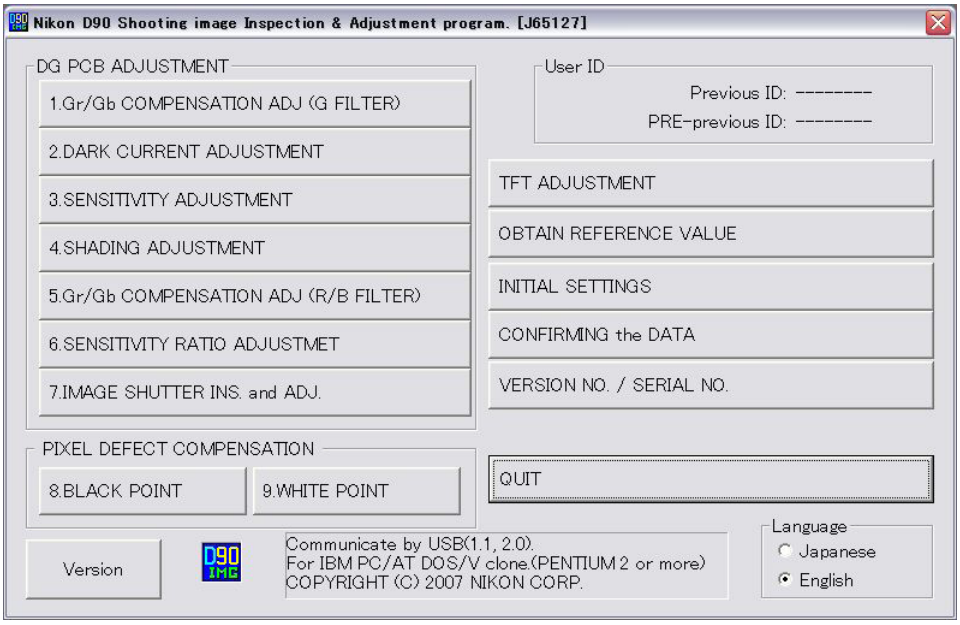

① Gr/Gb compensation adjustment (G filter)

② Dark current adjustmnt

③ Sensitivity adjustment

④ Shading adjustment

⑤ Gr/Gb compensation adjustment (R/B filter) (Line crawl adjustment)

⑥ Sensitivity ratio adjustment

⑦ Image shutter inspection and adjustment

⑧ Pixel defect compensation - black point

⑨ Pixel defect compensation - white point

⑩ TFT adjustment

⑪ Obtain reference value

⑫ Initial settings (factory default settings)

⑬ Confirm data

⑭ Version No./ Serial No.

サービス計画課 M

3. Hardware requirements

OS : Windows2000, WindowsXP, Windows VISTA
Japanese or English OS

PC : CPU Pentium Ⅱ or more
Memory 256MB or more
USB1.1 or 2.0

Screen size: 1024×768 pixels or more

4. How to set up

Create "C:\DeskTopLauncher\D-SLR\D90IMGIMG" folder is created in the hard disc of PC, so copy "PD90IMG.EXE". This file is an self-extracting file, so decompress it in the created folder.

※ Be sure to copy the above file in the same directory. Note that the adjustment can not be made except in the above folder.

Shooting image adjustment software and Software updates

Adjustments / Replacement parts	Ver. No	Gr/Gb difference compen-sation ADJ (G filter)	Dark current	Sensi-tivity	Shading	Gr/Gb compensa-tion adj. (R/B filter)	Sensi-tivity ratio	Image shutter adjust -ment	Pixel defect com-pensa-tion - Black point	Pixel defect com-pensa-tion - White point	TFT adjust -ment	Fac-tory default setting	Ver. No/ Ser.No
Shutter unit								○					
Main PCB unit								○					
AF sensor unit													
DC/DC PCB unit													
Metering FPC unit													
DG PCB unit ＊1	○	○	○	○	○	○	○	○	○	○	○	○	
CCD/FPC PCB unit		○	○	○	○	○	○	○	○	○			
TFT monitor											○		
License sheet													○

＊ When the DG-PCB unit is replaced, be sure to update the firmware before DG PCB adjustment .

サービス計画課 M

Image adjustment

① Gr/Gb compensation adjustment (G filter)

Camera is faced to the light-emitting box (color viewer) of LV13 equiv. with SP2 (G filter) being put between them. G-line crawl (3895×2610 pixels) is divided into (29×25) blocks, and the adjustment is made so that the difference between Gr and Gb output can fall in the standard range.

Device

J63070  COLOR VIEWER	J61185  D1 STANDARD LENS	J63086  FILTER SP2

② Dark current adjustment

Take a picture of the blackout surface (against dark background) and adjust the variation of dark current on the total screen.

※ When the adjustment is made, use eyepiece cap (or black cloth).

Device

 EYEPIECE CAP	 BODY CAP

③ Sensitivity adjustment

Under condition of ISO200 and ISO1600, the camera is faced to the color viewer (LV13 equiv.) with ND filter (-7 steps) being put between them. Using the tool lens (F5.6), the adjustment is made by changing the ampgain so that G output can fall in the standard range. The gain value is adjusted so that the G output average value (Average of Gr/Gb) of (425×425 pixels), which was deviated from the center by 425 pixels, can reach the target output level. By this sensitivity adjustment, the gain difference adjustment among channels is automatically made.

Device

J63070  COLOR VIEWER	J61185  D1 STANDARD LENS	J18358  ND FILTER 4X 2 pieces
J18191  ND FILTER 8X		

④ Shading adjustment

The camera is faced to the color viewer (LV13 equiv.) with ND filter (-4 steps) being put between them. The adjustment of white balance distribution is made for 3 areas [Area ① : Central 1936×1926-pixel area; Area ② : All the divided areas except ③ -areas after dividing (3890×2606-pixels) into (29×25-pixels); Area ③ ; 4 corners of (4×6-pixels) after dividing (3890×2606-pixel) into (29×25-pixels)].

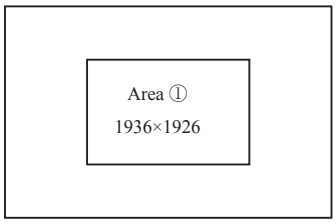

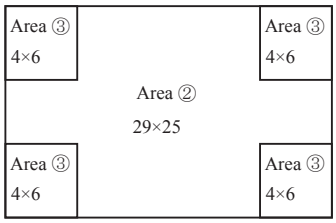

Device

J63070  COLOR VIEWER	J61185  D1 STANDARD LENS	J18358  ND FILTER 4X 2 pieces

⑤ Gr/Gb compensation adjustment (R/B filter) (Line crawl adjustment)

Using the tool lens (F5.6), the camera is faced to the color viewer (LV13 equiv.) with SP3 (R filter) or SP1 (B filter) being put between them, and the adjustment is made so that the difference in G output average between B-G line and G-R line when the whole screen is divided in areas, can fall in the standard range.

Device

J63070  COLOR VIEWER	J61185  D1 STANDARD LENS	J63085  FILTER SP1
J63087  FILTER SP3		

⑥ Sensitivity ratio adjustment

Using the shutter tester (LV9 equiv.) and tool lens (F5.6), the adjustment is made so that the R/G, B/G output becomes the same as the output ratio of the sensitivity ratio reference value that was calculated by the reference body. The adjustment is made only under the condition of ISO200, and the average value of (425 pixels × 425 pixels) which was deviated from the center by 425 pixels is used.

Device

J19123  SHUTTER TESTER EF-1(CE)	J61185  D1 STANDARD LENS

⑦ Image shutter inspection and adjustment

Based on the 1/60 sec. data of LV9, fine-tune the 1/4000 sec. data of LV15.

Device

J19123  SHUTTER TESTER EF-1(CE)	J61185  D1 STANDARD LENS

⑧ Pixel defect compensation - black point

Using the color viewer_ (LV13 equiv.) and tool lens (F5.6), pictures are taken. When pixels of which the output level is under specified value are detected, the coordinates of the detected pixels are additionally written as pixel defect compensation data.

Device

J63070  COLOR VIEWER	J61185  D1 STANDARD LENS

⑨ Pixel defect compensation - white point

Pictures are taken on the blackout surface (against dark background). In case the pixel output is found to be beyond the standard value, the detected pixel coordinates are additionally written as the pixel defect compensation data.

Device

 BODY CAP

⑩ TFT adjustment

Flickering, color and luminance of TFT are adjusted.

※ Whenever the DG-PCB or TFT monitor are replaced, be sure to perform "WRITING THE TFT FIXED VALUE."

Hue adjustment

Usually default value is set and adjustment is not necessary.

If some problem is found with hue by visual check, adjust and correct it by "+/-" button.

Brightness adjustment

Usually default value is set and adjustment is not necessary.

If some problem is found with brightness by visual check, adjust and correct it by "+/-" button.

⑪ Obtain reference value

・Sensitivity reference value calculation

Using the tool lens (F5.6), the reference body is faced to the color viewer (LV13 equiv.) with the ND filter (-7 steps) being put between them. Then, the G output average value of (425 pixels × 425 pixels), which was deviated from the center by 425 pixels, is stored in the D90BSD.DAT file as the sensitivity reference value.

・Sensitivity ratio reference value calculation

Using the tool lens (F5.6), the reference body is faced to the shutter tester (LV 9 equiv.). Then, the sensitivity ratio reference value GR and GB are calculated and stored in the D90BSD.DAT file, based on the G/R/B output average of (425 pixels × 425 pixels), which is deviated from the center by 425 pixels.

It is necessary to calculate the reference values in order to prevent the color temperature fluctuation caused by the shutter tester or color viewer's changes over time from affecting the results of the shooting image adjustment. By using the reference body, calculate the reference values once in about every 3 months, when either of the fluorescent of the color viewer or tool lens (F5.6) or ND filter (ND8X2) is replaced.

Device

J61235  D90 TOOL BODY	J63070  COLOR VIEWER	J19123  SHUTTER TESTER EF-1(CE)
J61185  D1 STANDARD LENS	J18191  ND FILTER 8X	J18358  ND FILTER 4X 2 pieces

⑫ Initial settings (Factory default settings)

This restores factory default settings. Select the language and video mode. Because this setting of RP DG-PCB is blank, be sure to set the initial default setting when the DG-PCB is replaced.

⑬ Confirm data

Saving/restoring of the system fixed values, image register, TFT register, EEPROM1, 2, 3.
The functions of saving/restoring each data is for sending backup data to Service Planning for analysis, if some problem occurs.

⑭ Version No./ Serial No.

RISC firmware version and serial number are indicated. Serial number can be written.
※ Whenever the license sheet is replaced, be sure to input the serial number.

∞ Infinity focus inspection & adjustment

・Replace the finder screen with the infinity focus check screen (J18394), and use the reference lens (J18010) and read the value. In case it is out of standard, increase or decrease washers (#266 selected from A to C) for adjustments. * Supply the power (Battery or EH-5) for checking.

Caution: When [J18394] is put in to replace the finder screen, put it with the silver spacers upward, which are attached on both sides.

J18010

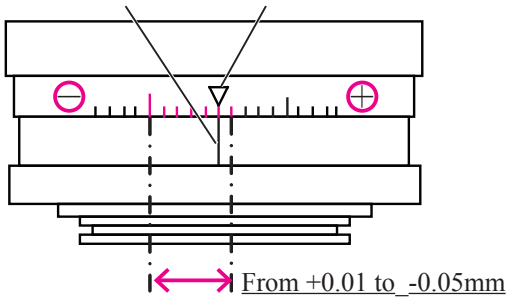

Standard: From +0.01 to -0.05mm 1 scale = 0.01mm)

#266A	1K602-832	Screen washer A 0.10mm
#266B	1K602-833	Screen washer B 0.20 mm
#266C	1K602-976	Screen washer C 0.05mm

Device

J19001	J18394	J18010
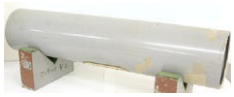	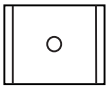	
COLLIMATOR F=600mm	INFINITY FOCUS ADJUSTMENT SCREEN	INFINITY STANDARD LENS 50/1.8

＜ Measurement of Consumption current value ＞

When this camera is used for measuring the consumption current value, connect the battery tool (J61213), and turn the change-SW to OFF. Then make measurements based on the following.

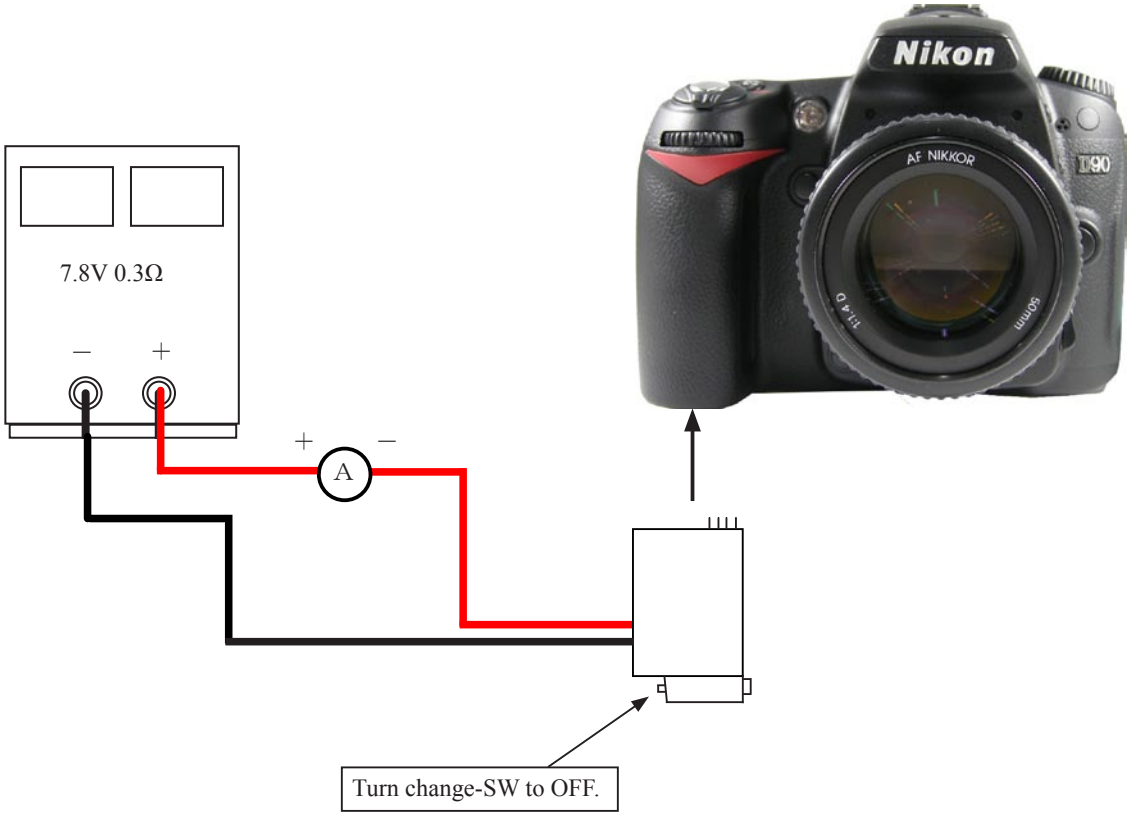

《Inspection standards》

Test item	Standard	Test condition
Main SW / OFF All operational buttons are NOT pushed.	250μA or less	ref. above. AF50/1.4D、EV12
Main SW / ON (Half-release timer OFF)	250μA or less	
Main SW / ON (Half-release timer ON)	200mA or less	
Main SW / ON (Illumination ON)	250mA or less	
Main SW / ON (TFT ON)	400mA or less	
Main SW / ON (Operating consumption current)	4A or less	

Caution:

When the consumption current value is measured, backup battery must be fully charged.

Cleaning between Penta prism and SI-LCD

《In case of cleaning by NOT removing the screen box》

- Take out the two screws (#689), and remove the mirror receiving part.

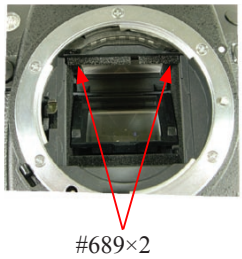

- Release the claw (indicated by the arrow) of the screen box retaining plate (#511), and lower [#511].

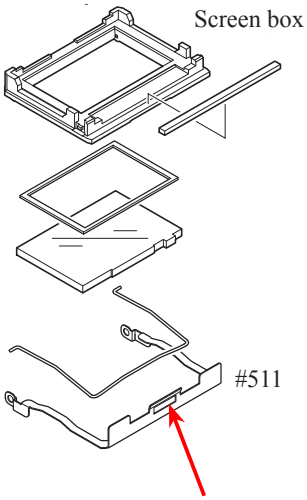

- Pull the screen box section down straightforward until the position shown in the picture.

＊ Do NOT pull down with force because the FPC is connected.

- Cleaning by blower is possible from the arrow-indicated area.

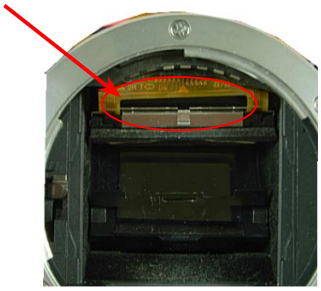

- After the cleaning, reassemble the screen box by pushing right upward, and fix with the screen box retaining plate (#511).

《In case of cleaning by removing the screen box》

- Remove the front cover. Disconnect the SI-FPC from the connector, then it is possible to remove the screen box section, and carry out cleaning.

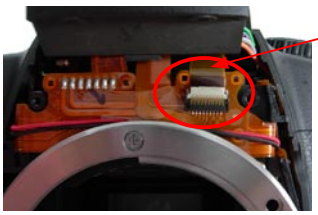

SI-FPC

Screen box section

Caution:

When the above cleaning is carried out, position the finder field frame 1 (#263) and SI unit (#B1046), then make assembly. After the assembly, inspect the focusing of the viewfinder. (Refer to Page A28 for positioning.)

実体配線図

WIRING

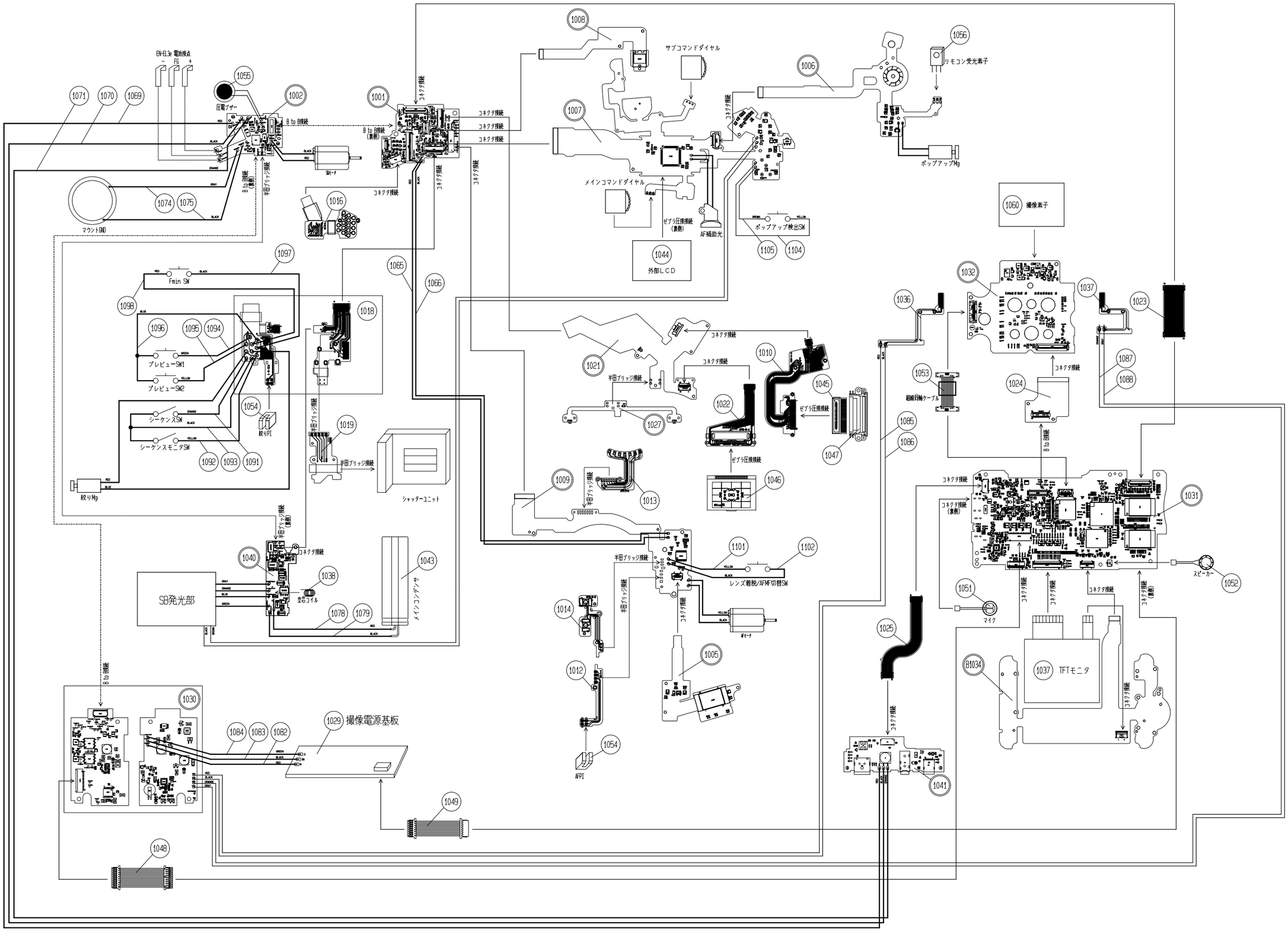

総合ブロック図

OVERALL BLOCK DIAGRAM

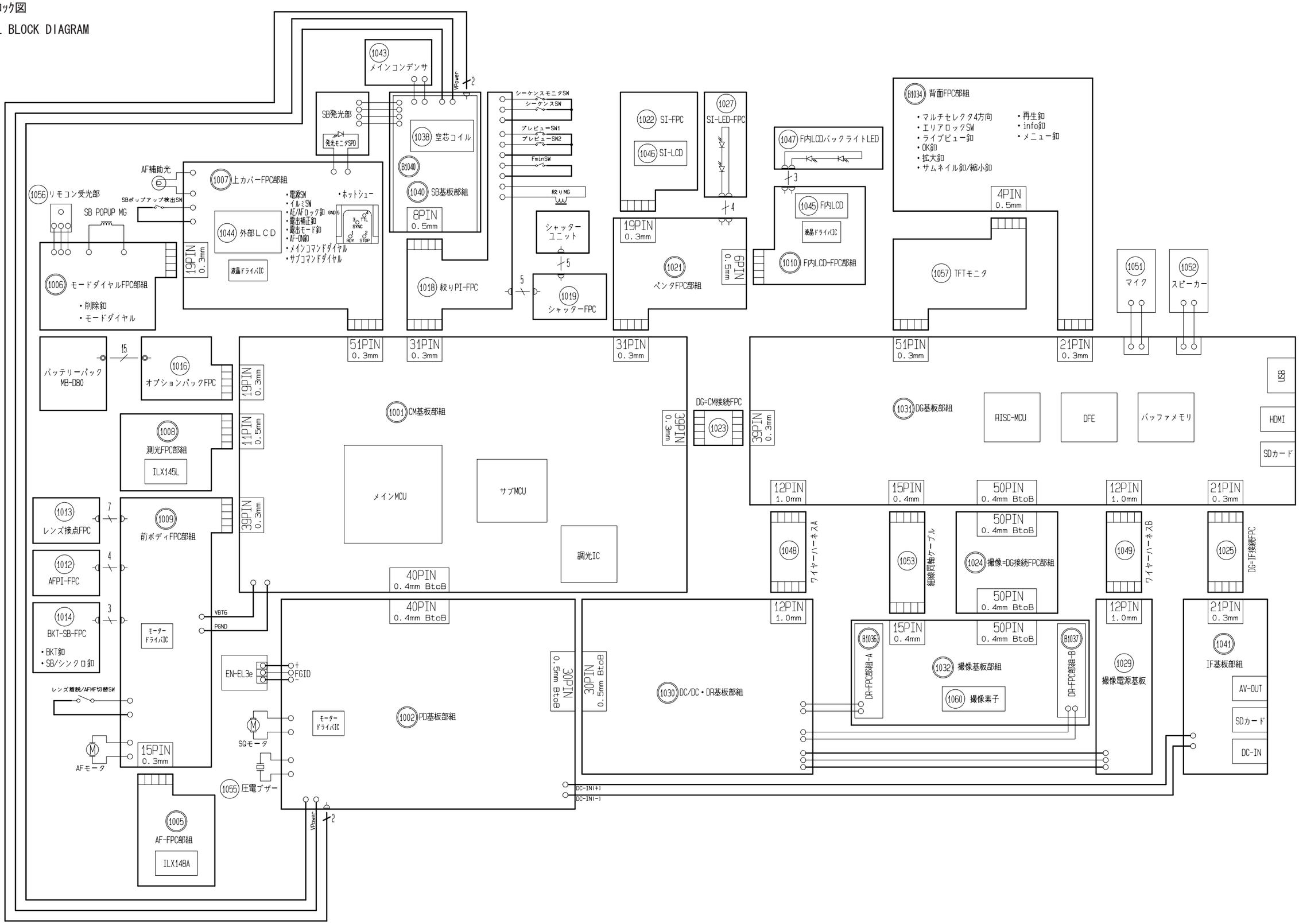

CM基板 （表）

CM BASE PLATE UNIT (Surf face)

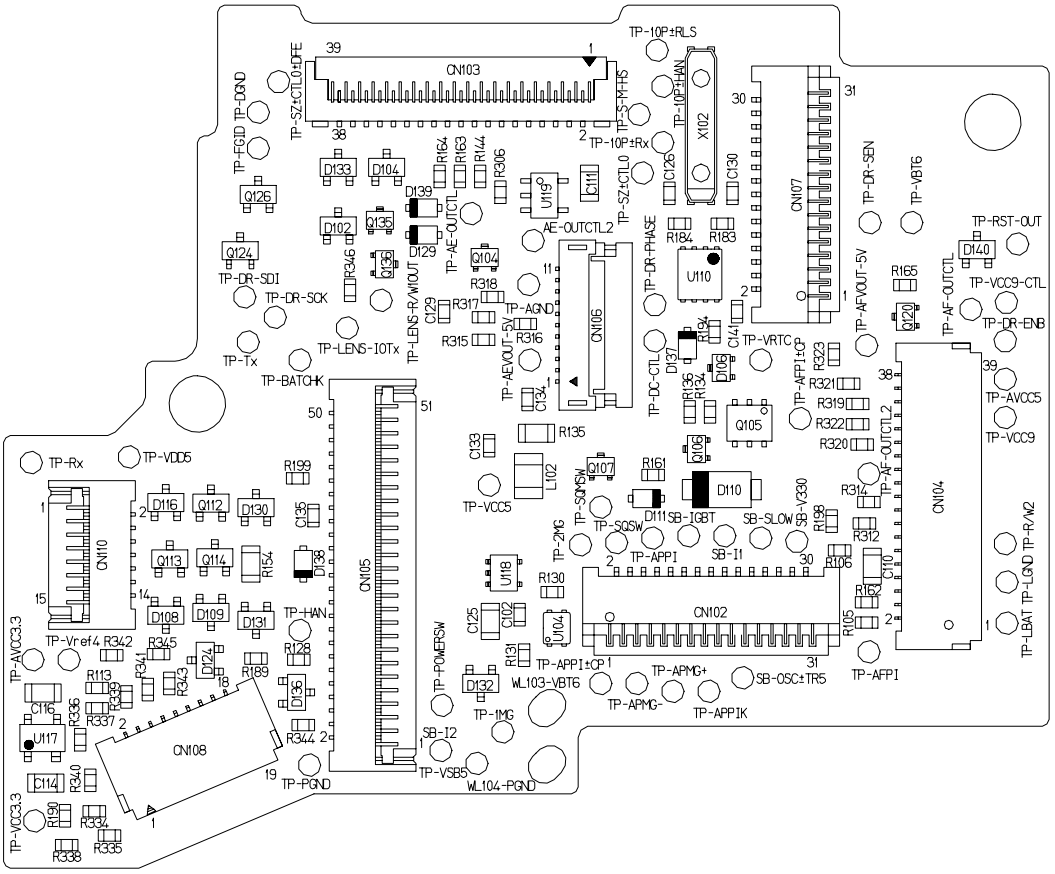

CM基板 （裏）

CM BASE PLATE UNIT (Reverse face)

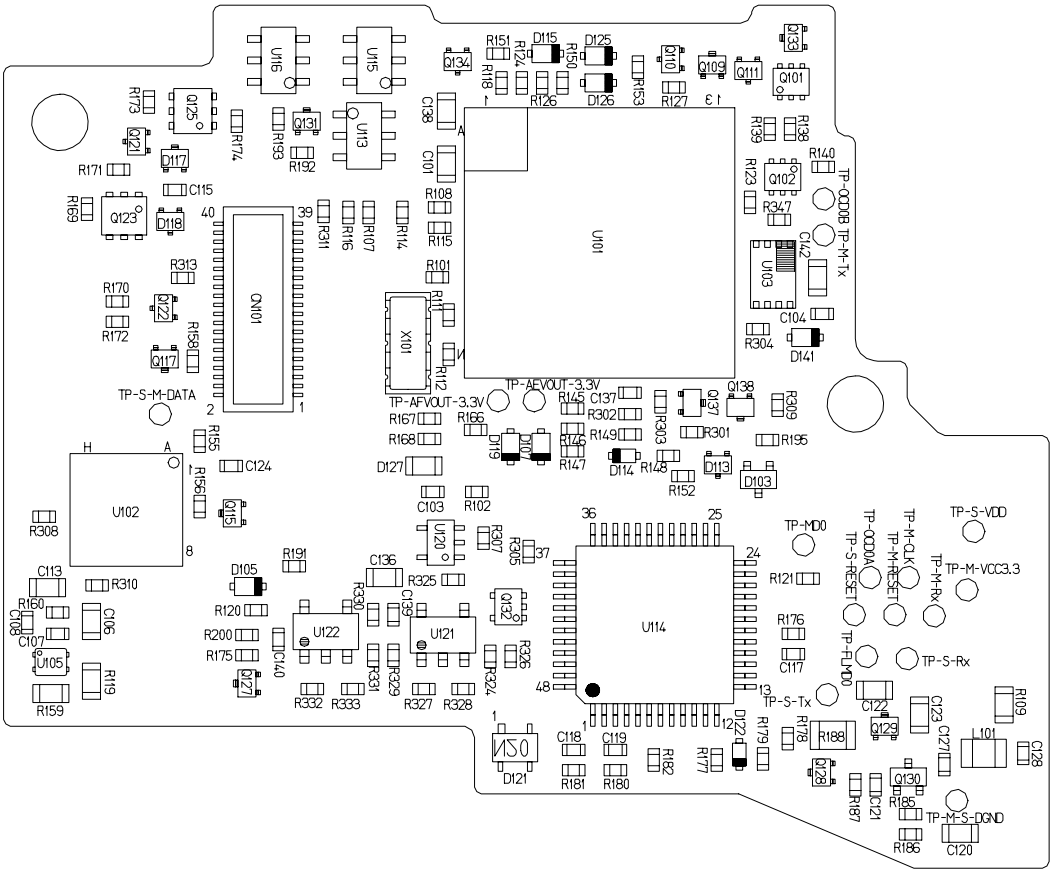

ﾊﾟﾜｰﾄﾞﾗｲﾌﾞ PCB （表）

POWER DRIVE PCB (Surf face)

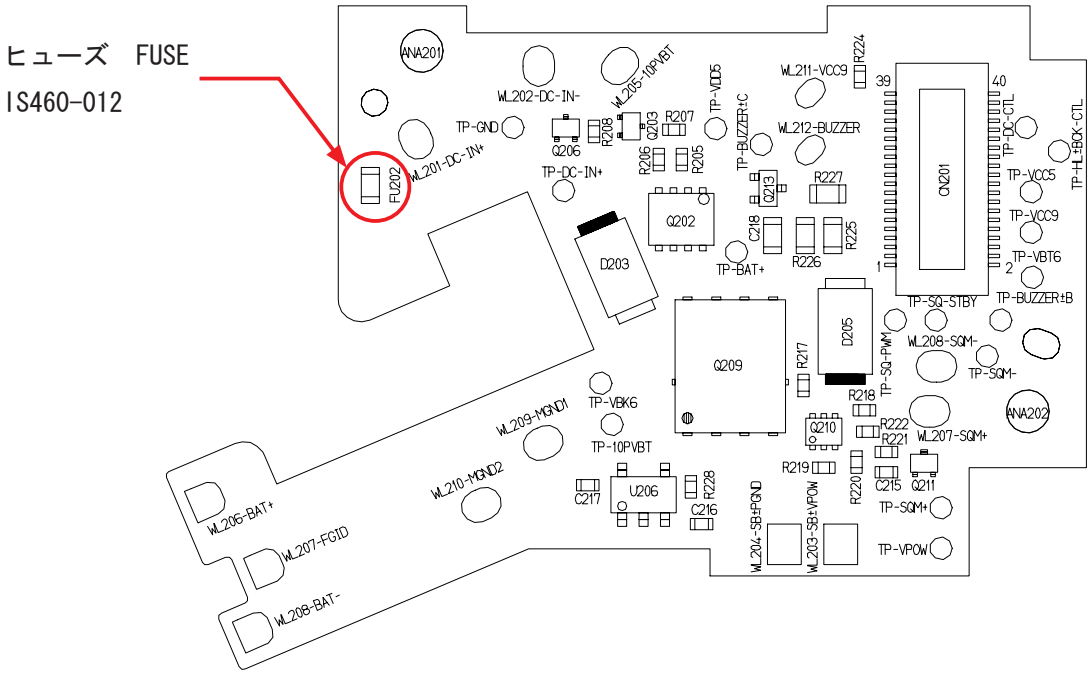

ﾊﾟﾜｰﾄﾞﾗｲﾌﾞ PCB （裏）

POWER DRIVE PCB (Reverse face)

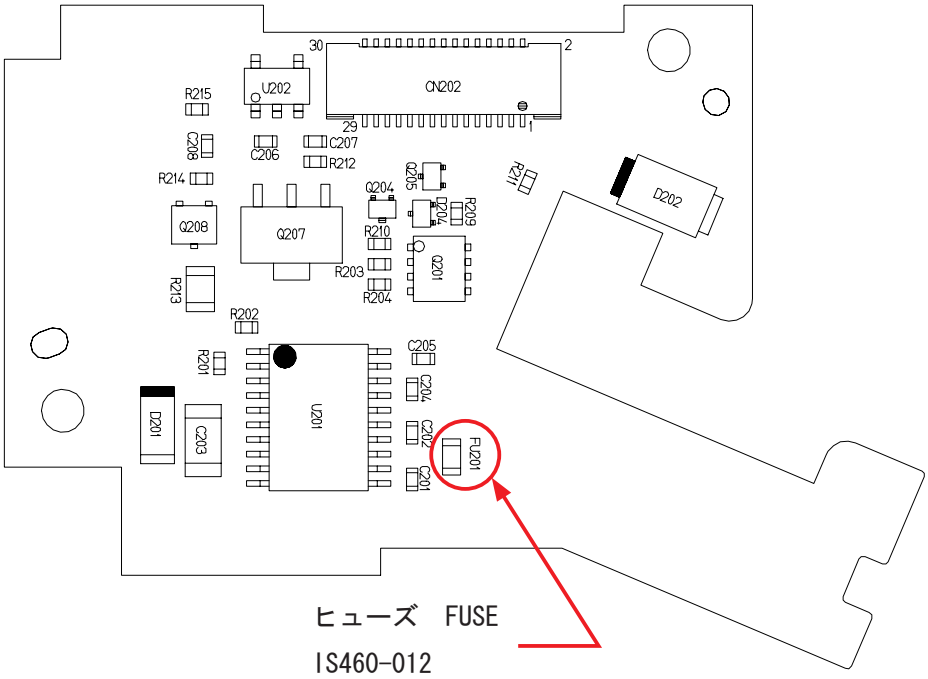

Phenomenon when FUSE has blown out.

Camera can NOT be powered by battery (BUT by AC adapter).

Camera can NOT be powered by AC adapter (BUT by battery).

AF-FPC 部組

AF-FPC UNIT

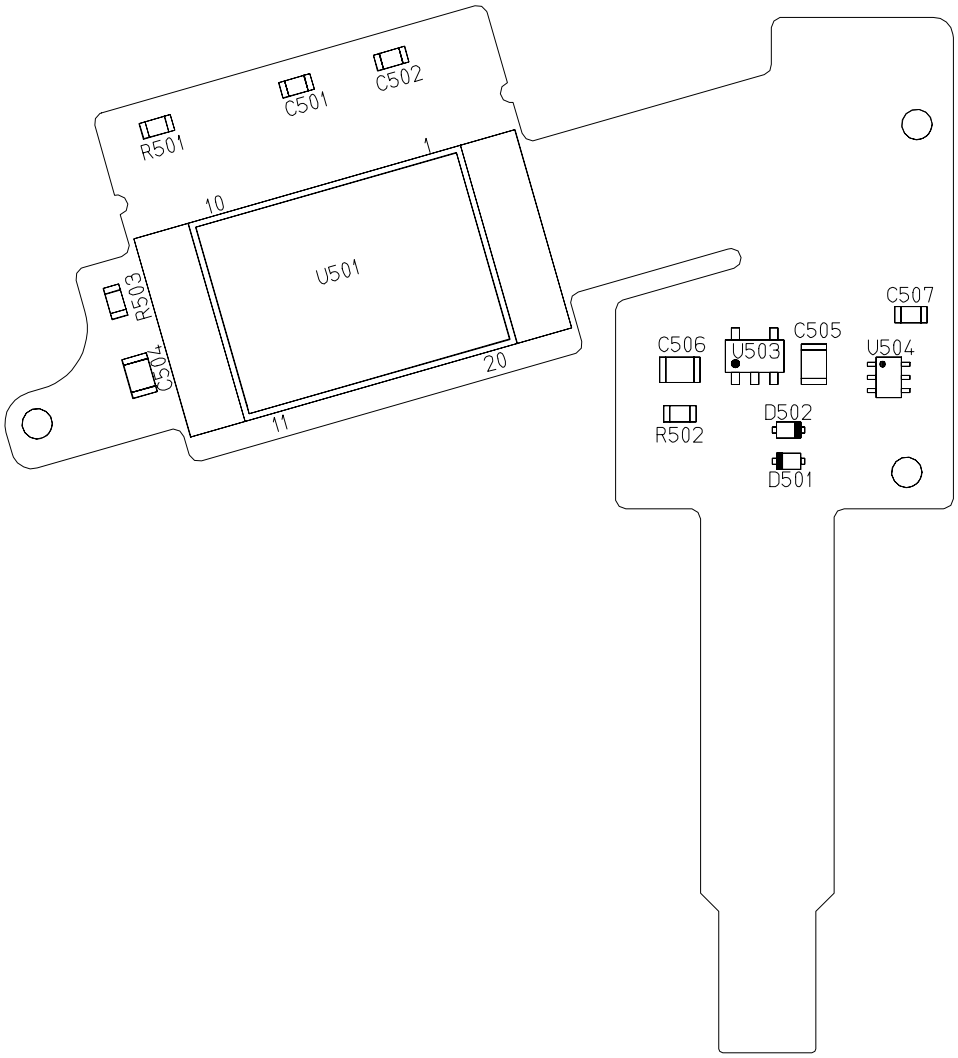

ﾓｰﾄﾞﾀﾞｲﾔﾙFPC部組
MODE DIAL FPC UNIT

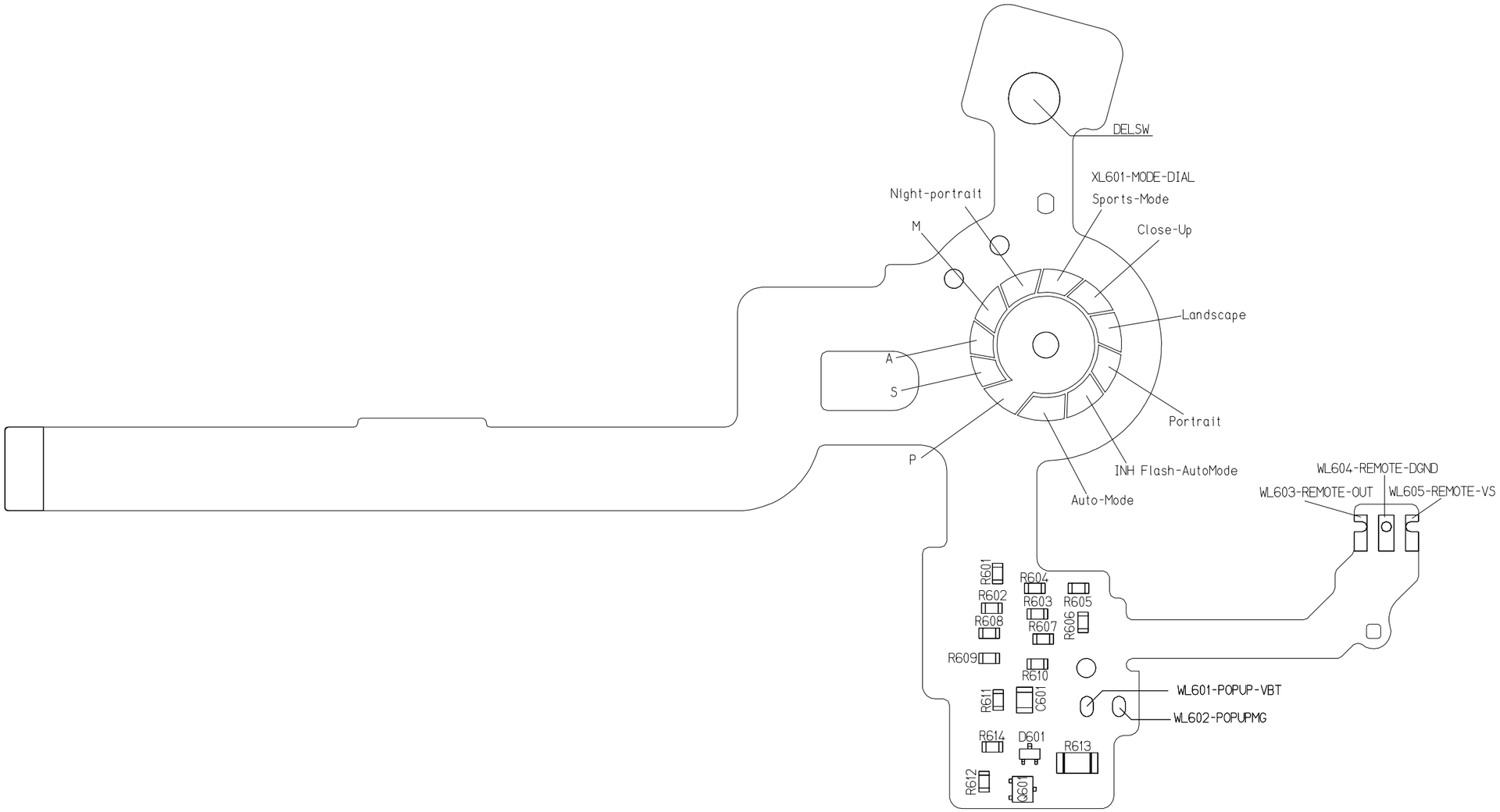

上カバーFPC部組

TOP COVER FPC UNIT (Surf face)

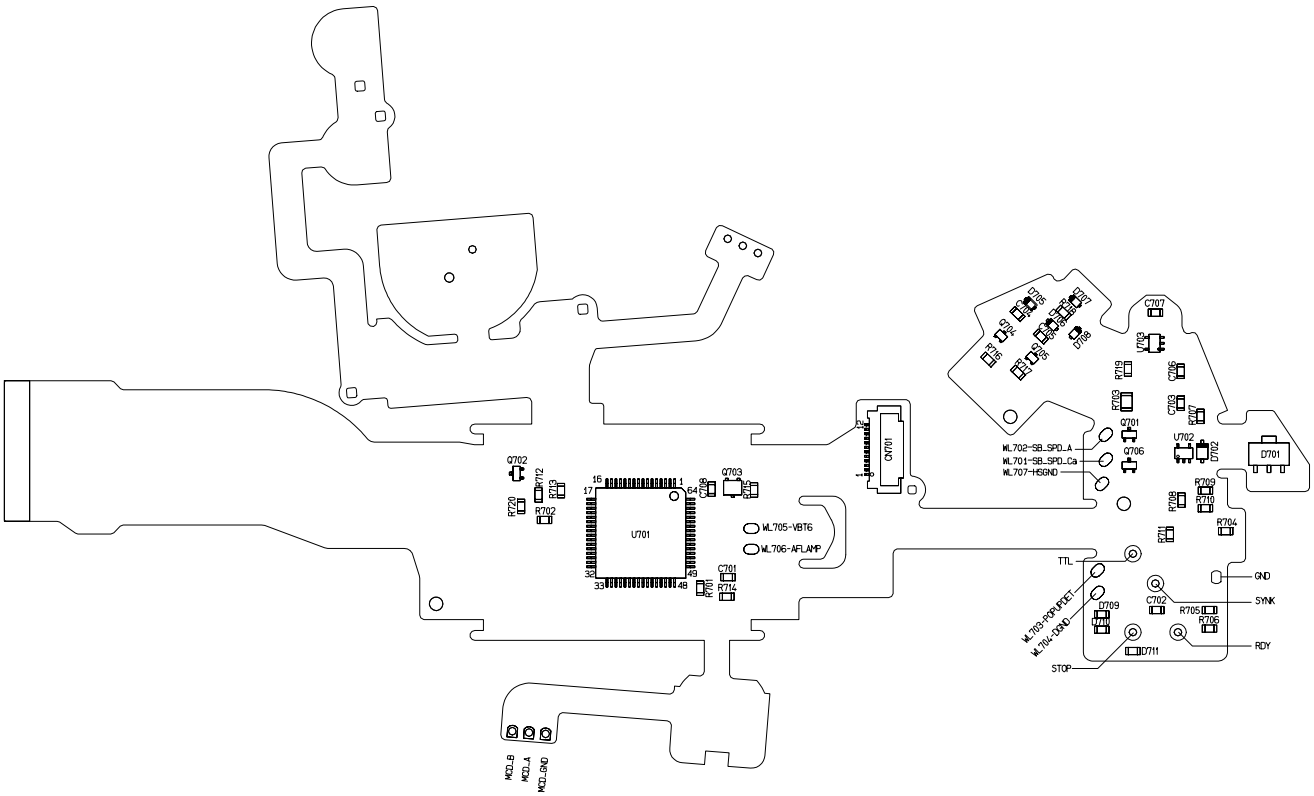

上カバーFPC部組

TOP COVER FPC UNIT (Reverse face)

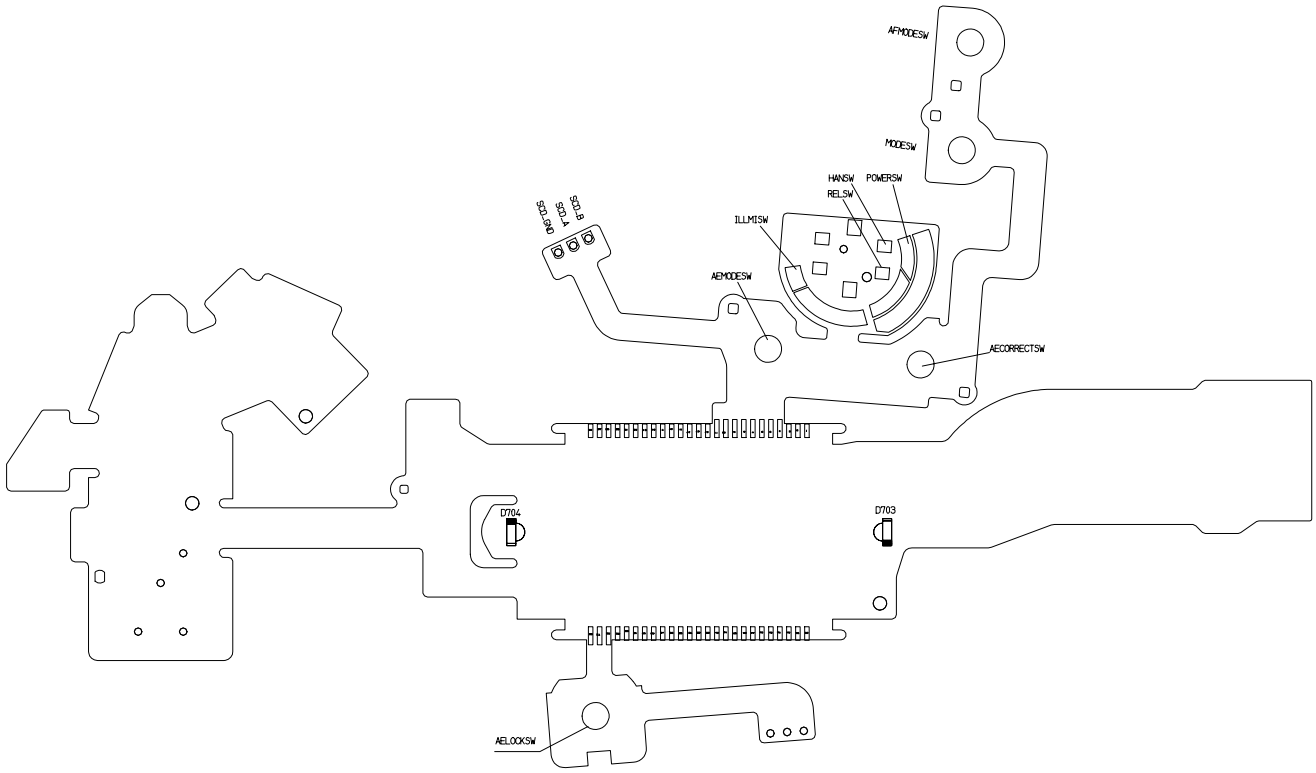

測光FPC部組

METERING FPC UNIT (Surf face)

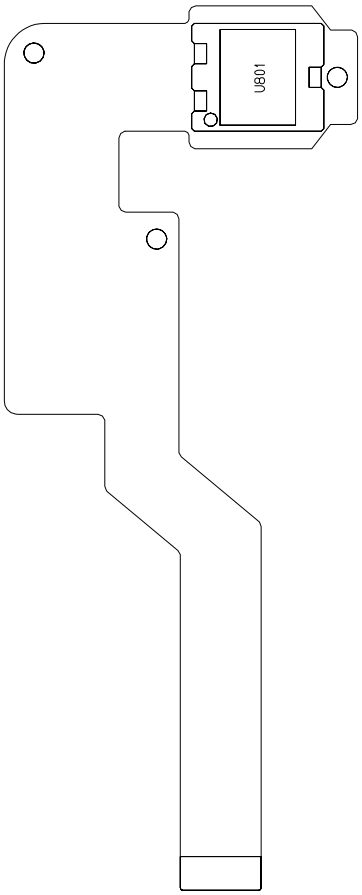

測光FPC部組

METERING FPC UNIT (Reverse face)

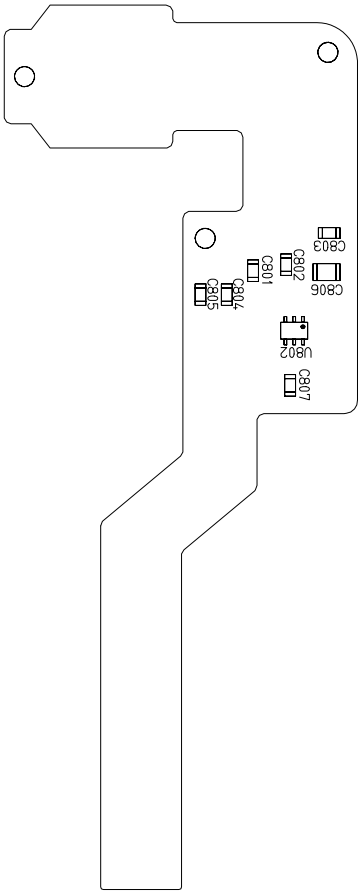

前ボディFPC部組
FRONT BODY FPC UNIT

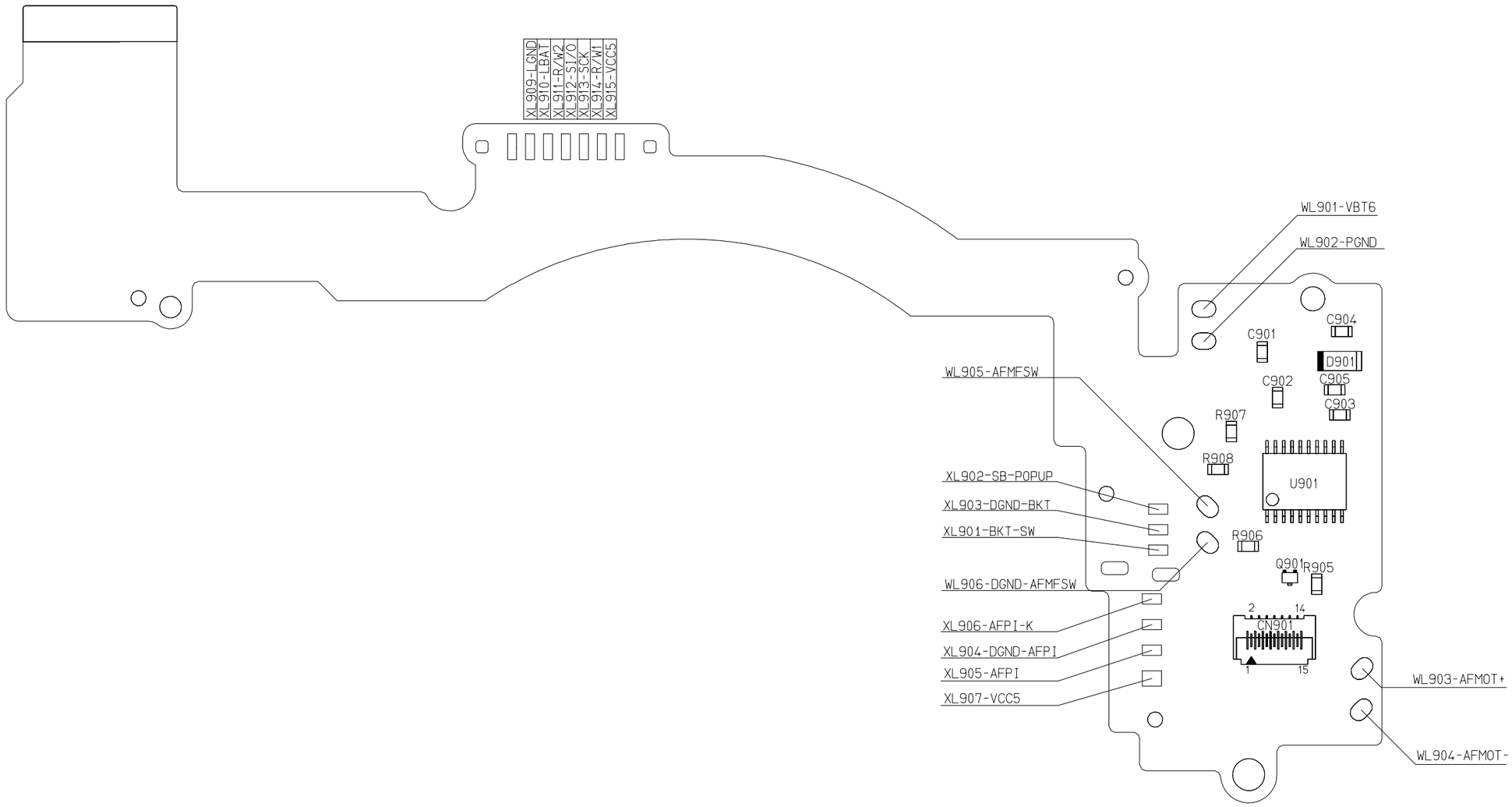

F内LCD-FPC部組

INSIDE FINDER LCD-FPC UNIT

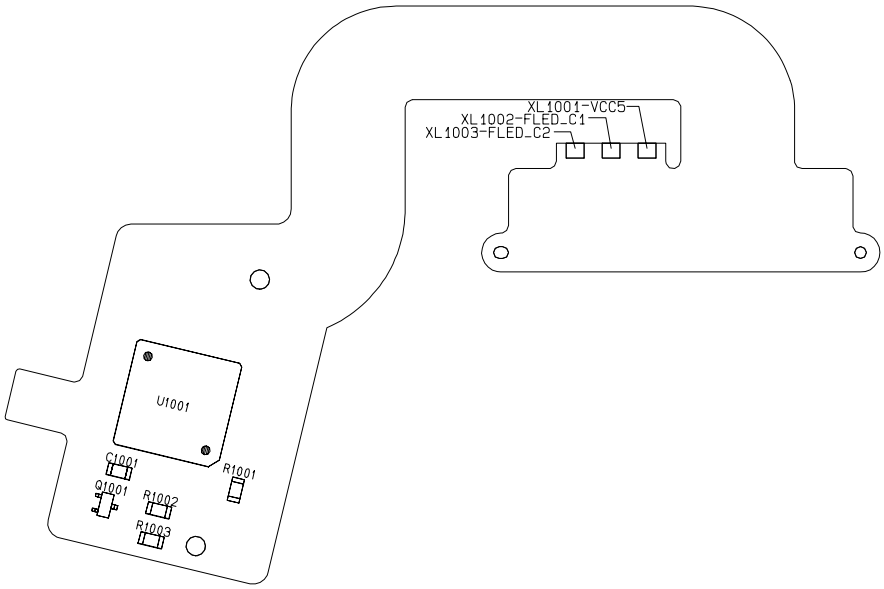

ﾍﾟﾝﾀFPC部組

PENTA PRISM FPC UNIT

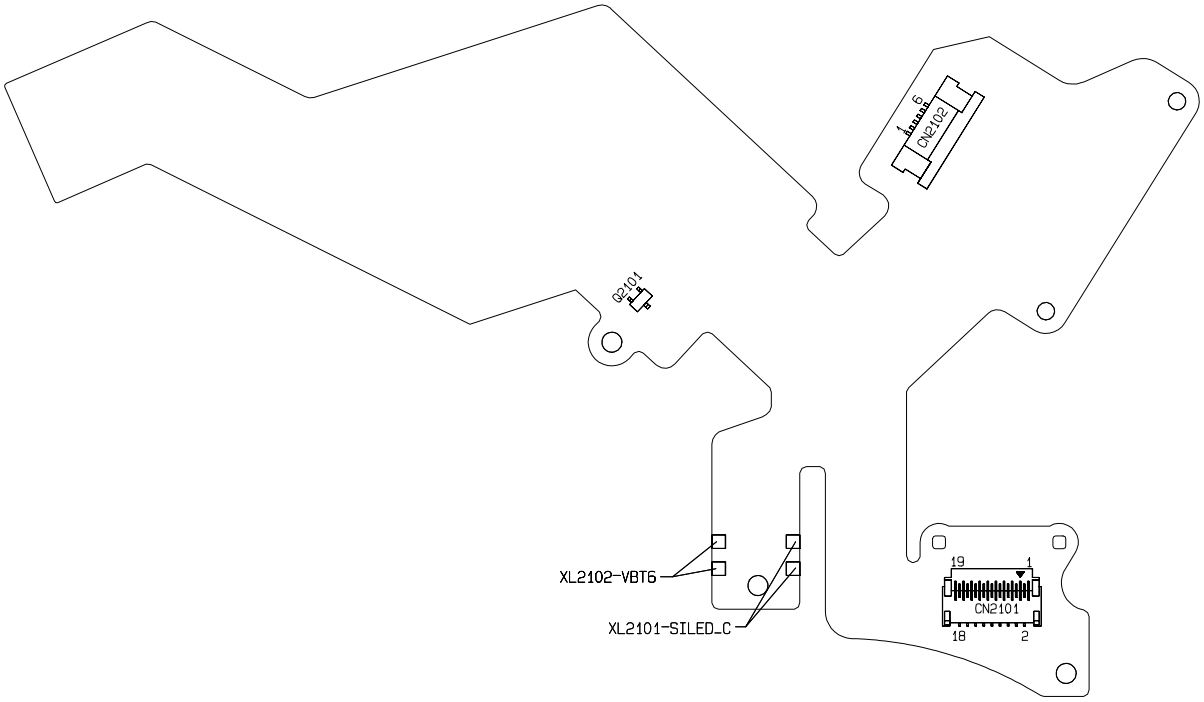

DC/DC・DR 基板部組

DC/DC・DR PCB UNIT (Surf face)

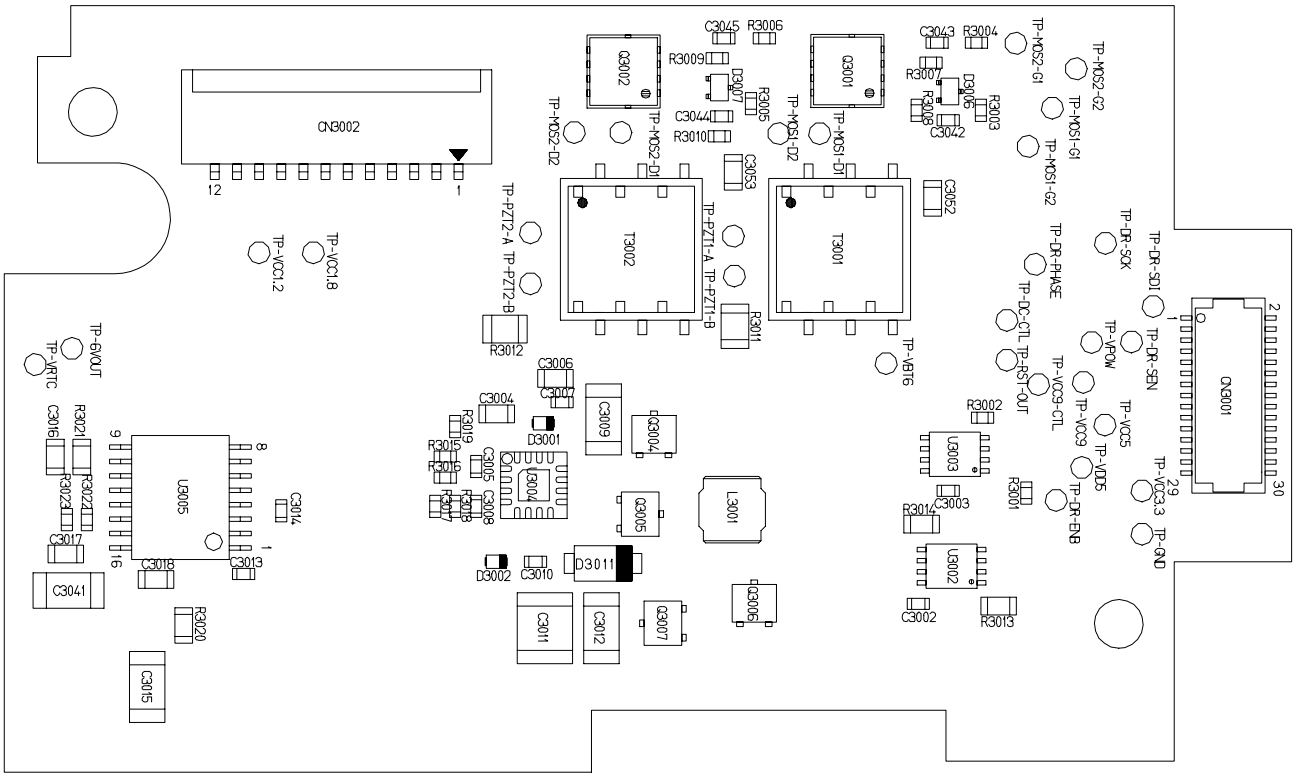

DC/DC・DR 基板部組

DC/DC・DR PCB UNIT (Reverse face)

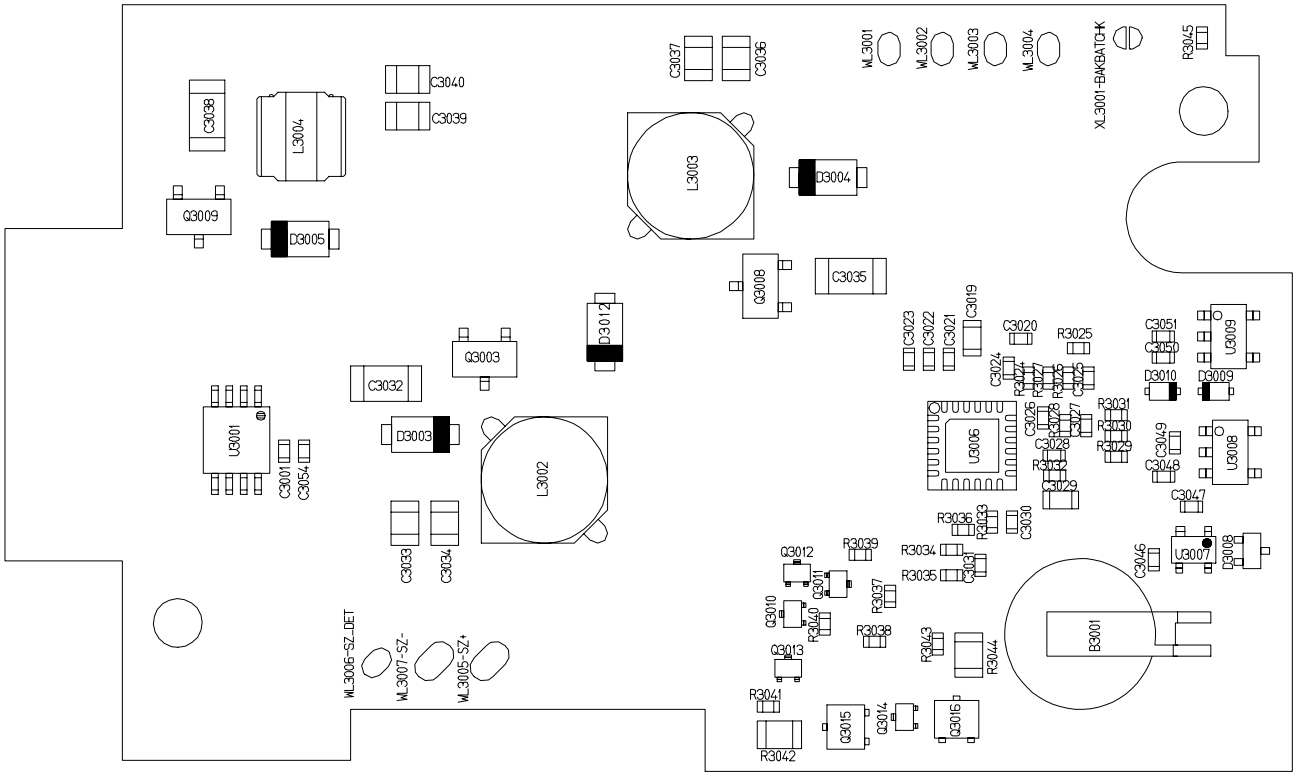

SB 基板（表）

SB PCB (Surf face)

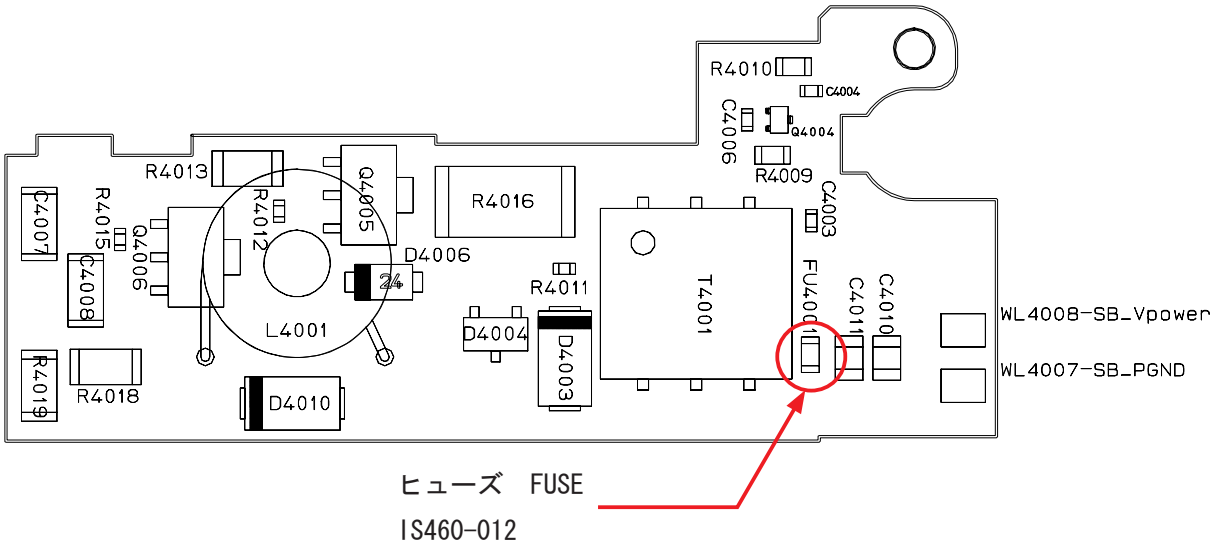

ヒューズ　FUSE

IS460-012

Phenomenon when FUSE has blown out.
Speedlight can NOT be charged.
Shutter can NOT be released.

SB 基板（裏）

SB PCB (Reverse face)

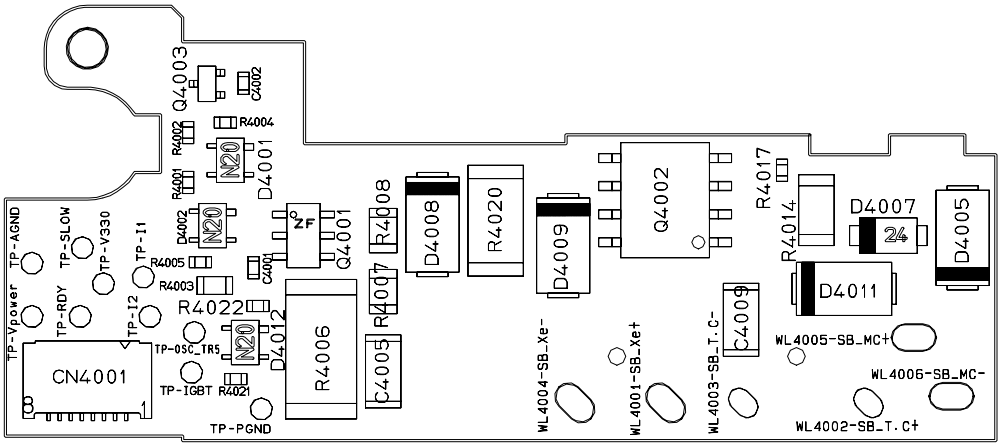

SB/IF 基板部組

SB/IF PCB UNIT

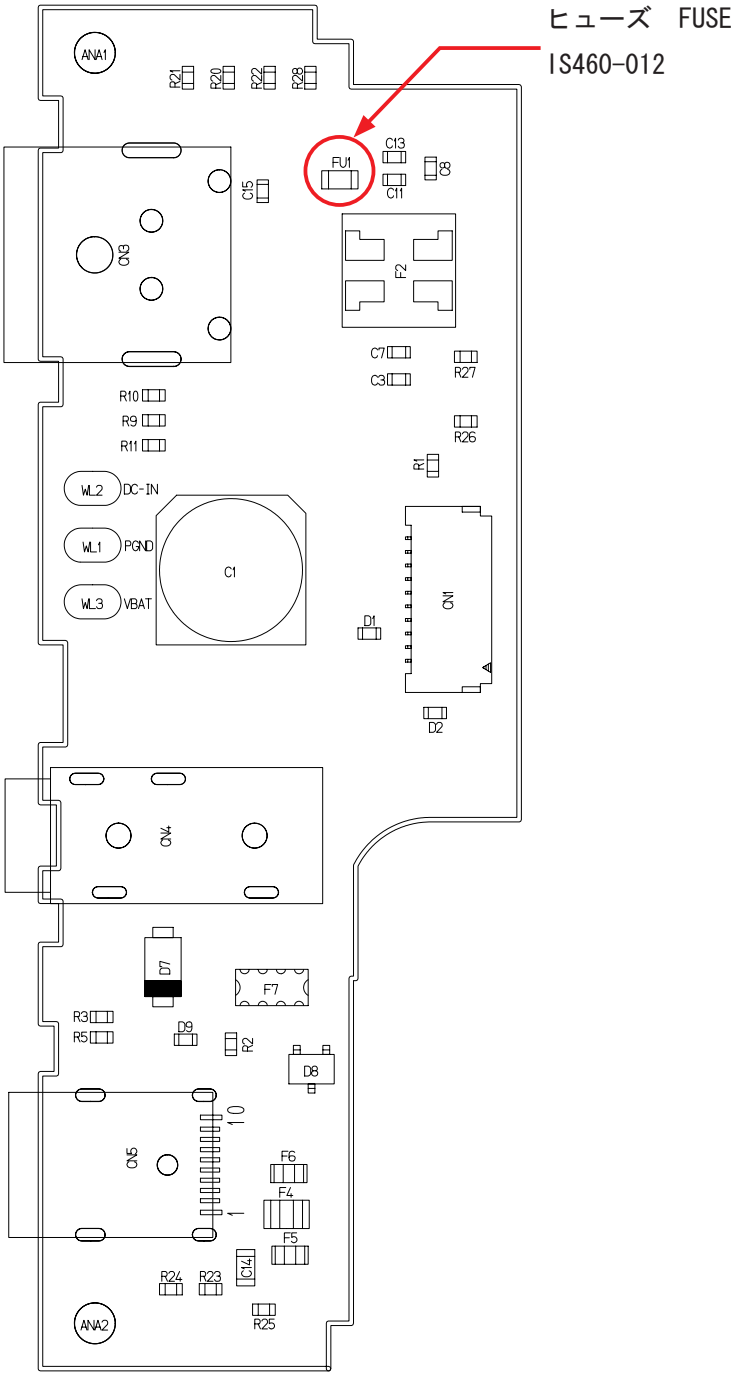

Phenomenon when FUSE has blown out.

Camera can NOT be powered by AC adapter (BUT by battery).

DG 基板部組

DG PCB UNIT

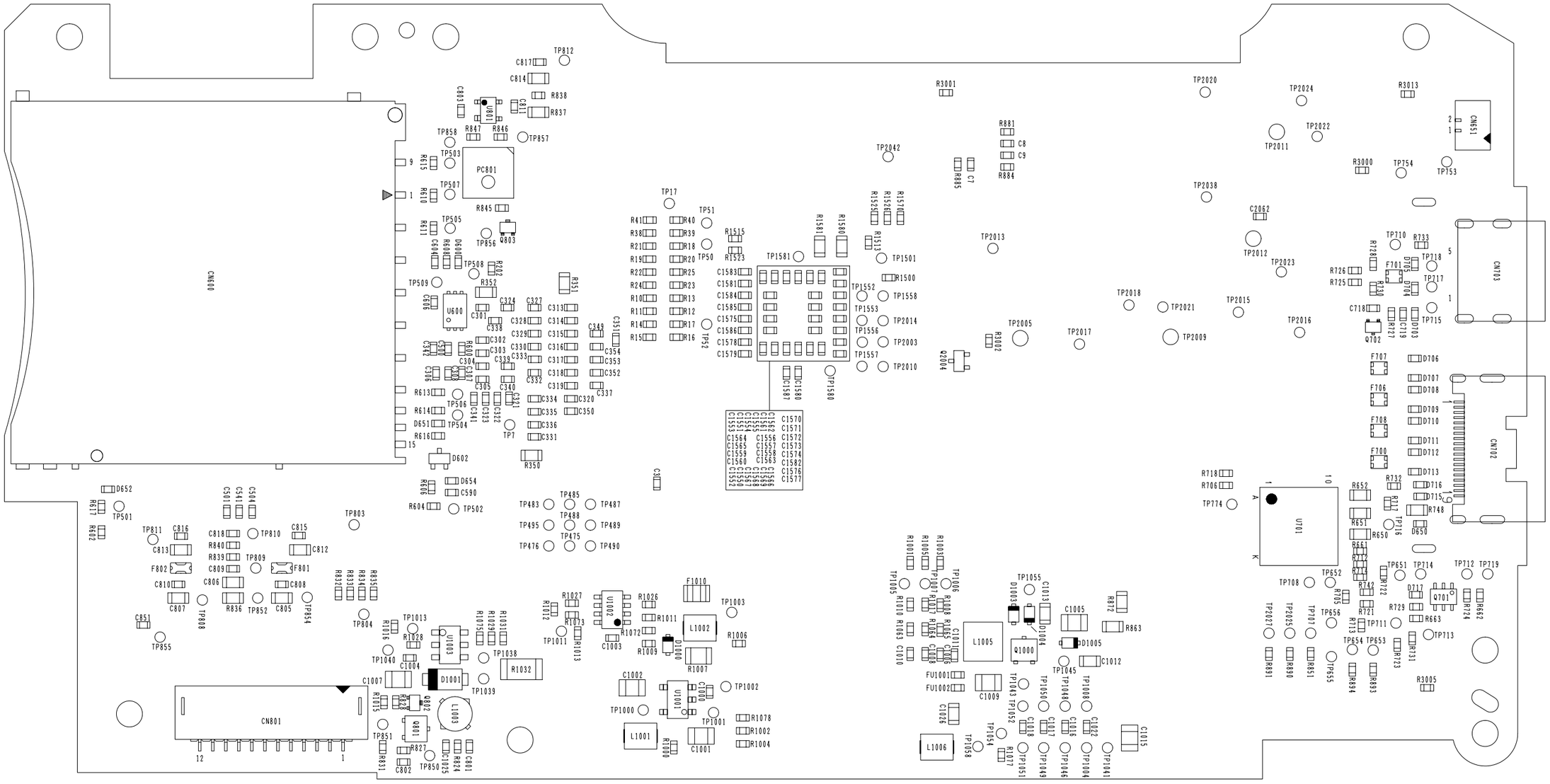

撮像電源基板部組

IMAGING POWER PCB UNIT

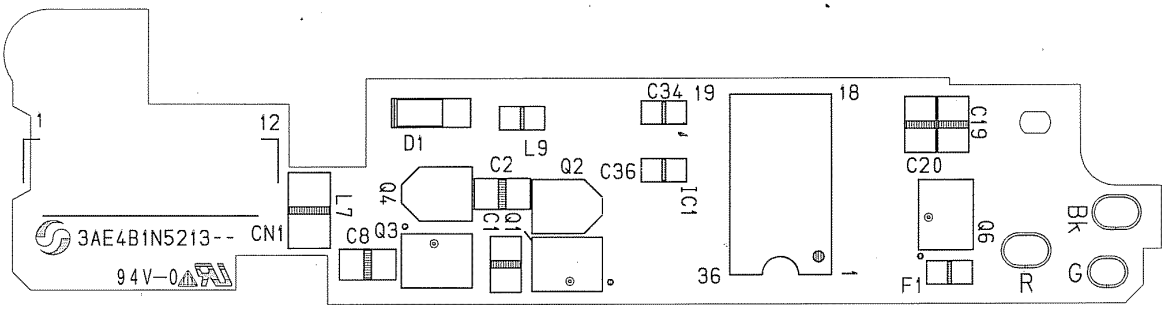

Inspection standards

Items	Judgment standard	Remarks
External view		
Step (height difference)	Btwn top cover & apron: 0.2 mm or less Other parts: 0.3 mm or less Moving parts: 0.5 mm or less	Visual check Digital micrometer
Gap		
	Btwn Top cover & Apron, I/F cover , back cover : 0.2 mm or less Btwn Top cover & Apron, I/F cover : 0.2 mm or less SB case & Top cover; SB case & Apron (when built-in speedlight is stored) : 0.3 mm or less Other parts: 0.3 mm or less Moving parts: 0.5 mm or less	Visual check Thickness gauge
Size / Force		
Shutter release button	Protrusion: 1 ± 0.2 mm Halfway pressing force: 0.98±0.49 N (100±50gf) Halfway pressing stroke: 0.6 ± 0.25 mm Releasing force: 2.55±0.69 N (260±70gf) Releasing stroke: 0.8±0.25 ㎜ Extra stroke after releasing button: 0.6 mm or more Difference btwn Half-releasing and Full pressing force: 0.5Nor more (51gfor more)	Digital micrometer Tension gauge
Aperture lever	3.4 height: 3.4 +0.2/-0.1 mm	3.4 height gauge
Main mirror	45° angle: Up-down ± 10' Right-left ± 30' Distortion: 8' or less Clearance for up-mirror in mirror box: None	Collimator Main mirror tool Visual check Feeling in hand
Sub-mirror	59° angle: ｺﾘﾒｰﾀ測定値 0±20' Distortion: 8' or less	Sub-mirror tool
∞ Infinity focus	± 100 μm	Collimator ∞ Focs lens

Items	Judgment standard	Remarks
AF accuracy		
Yaw	Center : ± 4 mrad Others: ± 10 mrad	PC Special tool Brightness box
Pitch	Center : ± 5 mrad Others: ± 11 mrad	
Block Def amount	Others than Side: 0 ± 50 μm Side: 0 ± 75 μm	
AF-assist illuminator		AF50/1.4D
Lighting level	Range from EV5.2 to 6.2	Brightness box
AE accuracy		
Exposure on image	1/4000 ※ : 0.2±0.65EV Speed at less than 1/4000 ～ 1/2000 or More : ± 0.65EV Lower SPeed at less than 1/2000:±0.5EV Dispersion: 0.6 EV or less Difference in AE mode : 0.6 EV or less Difference in Metering mode) : 0.3 E Vor less	AF50/1.4D (∞) Shutter SpeedTestr
Shutter accuracy		
Speed accuracy	Speed at more than 1/2000 :±0.55EV "1/2000" sec : ± 0.35 EV From "(1/2000)" to 30 sec.: ± 0.25 EV	Shutter speed tester
Dispersion	From "1/4000" to "(1/2000)" sec : 0.4 EV or less From "1/2000" to "(1/1000)" sec : 0.3 EV or less From "1/1000" to "30" sec.: 0.25 EV or less	
Shutter curtain speed	Both front and rear curtains (up-down 16.4 mm or less): approx. 3.8 ms	
Shutter curtain bound	Black/white bound (within frame): None	
Synchronization	Timelag: : From "- 0.05" to "0.5" ms	

Items	Judgment standard	Remarks
Viewfinder		
Inner LCD lower panel window position	Up-down position: No outstanding misalignment Tilt: 1 ° or less	Visual check AF50/1.4D, F5.6 Looking through viewfinder, measure a tilt of indication line (parallel to the bottom) from the bottom line of the frame. .
Finder field frame	Lens vignetting/distortion: No outstanding vignetting/distortion Tilt: (based on Bottom cover): 90°± 30' Relative angle to image sernsor : 0.5° or less	
Field of viewfinder (frame coverage)	In height and width: "96%" +3% / -2%	
Parallax (Difference of center from the shot image/ sensor)	Up-down: 0.5 mm or less Right-left: 0.5 mm or less	
Eye point	Distance to eyepiece protectiv glass:19.5mm±10%	Vernier caliper Eye point tool
Standby (idle) / consumed current	Main SW / OFF: 250 μA or less （Do NOT press any operational buttons.） Main SW / ON (Half-release timer: OFF): 250 μA or less Main SW / ON (Half-release timer: ON): 200 mA or less Main SW / ON (Illumination: ON): 250 mA or less Main SW / ON (TFT ON): 400 mA or less Main SW / ON : 4A or less	Constant Voltage Poewr Source 7.8 ＋ 0.3Ω LV12 Oscilloscope

Items	Judgment standard	Remarks
Operation time / consumption current accumulated	Lens scan AF50/1.8 Operation time: 1000 ms or less Consumption current accumulated: 500 mAsec or less AF70-210/4-5.6D Operation time: 2000 ms or less Consumption current accumulated: 800 mAsec or less Preview (AF50/1.4D) Operation time: 200ms or less Consumption current accumulated : 120 mAsec or less Release without memory card (AF50/1.4D) Operation time: 220 ms or less Consumption current accumulated: 400 mAsec or less	Constant Voltage Poewr Source 7.8 ＋ 0.3Ω LV12 Oscilloscope
Clock accuracy	Difference par month: ± 60 seconds (20℃)	Wave clock
BC level	EN-EL3e Level 5 5 lights up Charge remaining: 80-100% Level 4 4 lights up Charge remaining: 60-79% Level 3 3 lights up Charge remaining: 40-59% Level 2 2 lights up Charge remaining: 20-39% Level 1 1 light up Charge remaining: 1-19% Level 0 1 light blinking Charge remaining: 0%	Check the level in the LCD control panel on top of camera or TFT battery information Communication-capable battery tool
	AC adapteer 11.0V：11.0±0.15V 9.5V：9.5±0.13V 8.0V：8.0±0.1V	Communication-capable battery tool, Constant voltage power source, Battery tool
Bulb battry life	Whn special Li-ion is used :2 and half hours or more	Battry Clock
Battery life EN-EL3e	Professional mode Room temperature: 4000 frames or more 0℃ 3500 frames or more CIPA mode 23 ± 2℃ 1050 frames or more	Card used: Sundisk Extreme Ⅲ 2GB Battery used: EN-EL3e

Items	Judgment standard	Remarks
Resolution	<u>Judgment method</u> When TIFF/JPEG recorded: Take a shot by matching the angle of view of the chart's vertical direction. Adjust the speed so that brightness becomes 220 ± 5LSB (8bit) at white part about the center of chart. <u>Standard</u> When TIFF recorded: Horizontal resolution / Vertical resolution: 1900 TV lines or more When JPEG recorded: Horizontal resolution / Vertical resolution: 1800 TV lines or more	AFS80-200mm/F2.8D 105mm F5.6 AE: M mode Image size: L ISO200
Pixel defects: White pixel against dark back-ground	<u>Judgment method</u> Judge the level of white pixels <u>Standard</u> When Raw recorded: At 25℃ : 240 LSB or less At 40℃ : 960 LSB or less When TIFF/JPEG recorded: At 25℃ : 30 LSB or less At 40℃ : 60 LSB or less	Lens: Any (lens cap) Shutter speed: 1/30 AE: M mode Image size: L WB: Direct sunlight Temperature: 25 ± 2℃ , 40^{+5}_{-0}℃ ISO200
Dusts in shot image	<u>Judgment method</u> Compensate exposure so that the center of "425×425 pixel" image becomes 156-187 LSB), compared to correct exposure. In zone Ⅱ area in JPEG of "G shading"item, judge based on dust contrast, size, quan-tity, and distance btwn dusts. <u>Standard</u> ・Point defect Allowable quantity: 10 dusts or less in total (when contrast 9% or less, and size is φ18Pixel or less) ・Pixel defect Allowable contrast (15% or less); size (φ6Pixel or less)	AF105mm/F2.8D F16 AE: M mode Image quality: JPEG FINE WB: Preset ISO200

Items	Judgment standard	Remarks
TFT unit Point defect	Luminescent pixels: 3 or less (G ＝ 0, Others than "G" ≦ 1 in "A" section) There must not be 2 consecutive defective pixels. Black pixels: 3 or less (1 or less in "A" section) There must not be 2 consecutive defective pixels. Total of luminescent pixels and black pixels: 3 or less (1 or less in "A" area) A : 19.08×25.44mm A': 38.16×50.88mm (excluding "A") (The size in height and width is measured by aligning the center of the monitor.) 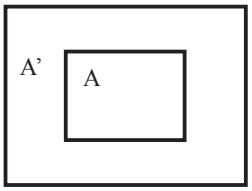	
Backlight life	5000 hours or more (at less than 40℃)	

工具・ＴＯＯＬＳ

※：新規設定工具・NEW TOOL

工具番号 Tool No.	名　称 Name of tool	備　考 Others
J15259 	ＡＦ調整工具台 AF ADJUSTING TOOL	
J15280 	Ｚレンズ用支持ホルダー LENS HOLDER	
J15264 	高周波タイプ蛍光灯器具 ILLUMINATION BOX FOR AF ADJUSTMENT	払底品 OUT OF STOCK
J18344 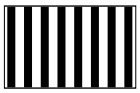	マルチカム２０００　ＡＦチャート MULTI CAM 2000 AF CHART	FOR D100 D70 D70S D50 D200
J15409 	チャートボード CHART BOARD	FOR D2SERIES, D40
J18001-1 	ボディバック出し工具 BODY BACK FOCUS GAUGE	
J18004 	絞りレバー高さ点検工具 Aperture lever positioning gauge	
J18010 	無限大合致基準レンズ５０／１．８ INFINITY STANDARD LENS 50/1.8	払底品 OUT OF STOCK
J18358 	ＮＤフィルター４× ND FILTER 4X	２枚使用 IT USES BY TWO PIECES.
J18191 	ＮＤフィルター８× ND FILTER 8X	２枚使用 IT USES BY TWO PIECES.
J18230 	ＹＡＷ・ＰＩＴＣＨ工具 YAW・PITCH ADJUSTMENT TOOL	FOR F5, F100, F90, F90X, D-SLR
J18266 	ＡＦ調整用Ｚレンズ（１ｍ用） Z ADJUSTMENT LENS (FOR 1m)	FOR F5, F100, D-SLR

※：新規設定工具・NEW TOOL

工具番号 Tool No.	名　称 Name of tool	備　考 Others
J18267	ＡＦ５０／１．４Ｄ LENS AF50/1.4D	
J18389	反射ミラー REFLECTION MIRROR	FOR D200,D80
J18394	無限合致調整用スクリーン INFINITY FOCUS ADJUSTMENT SCREEN	FOR D200,D80
J61223	ライティングルーペ LIGHTING LOUPE	FOR D-SLR
J19001	∞合致コリメーターＦ＝６００mm COLLIMATOR F=600mm	
J19004-1	インジケータ及びスタンド DIAL INDICATOR AND STAND	
J19109	ＭＣ－３１（接続コード） ＭＣ－３１　(CONNECTING CORD)	
J19123	シャッター試験機　ＥＦ－１（ＣＥ） SHUTTER TESTER EF-1(CE)	共立電機製 KYORITSU ELECTRIC EF-8000 USABLE
J19132	メイン・サブミラー角度検査機 MAIN/SUB MIRROR ANGLE INSPECTION TOOL	FOR D3,ETC
J61185	撮像関係調整用レンズ D1 STANDARD LENS	FOR D-SLR
※J65126	カメラ部調整用ソフト ADJ. SOFT FOR CAMERA	
※J65127	撮像部調整用ソフト ADJ. SOFT FOR CAMERA	
J18360	基準反射布 Standard reflector 1.5M × 1.5M	FOR C-DSC (L15,L11 etc)

※：新規設定工具・NEW TOOL

工具番号 Tool No.	名　称 Name of tool	備　考 Others
※J61235 	Ｄ９０工具ボディ（撮像用基準ボディ） D90 TOOL BODY	
J63068 	輝度計（ＢＭ－３０００） LUMINANCE METER BM-3000	
J63070 	カラービューア COLOR VIEWER	
J63085 	フィルター　ＳＰ１ FILTER SP1	FOR D2H, D70, D70s, D50, D200, D80, D40, D40x
J63086 	フィルター　ＳＰ２ FILTER SP2	FOR D2H, D70, D70s, D50, D200, D80, D40, D40x
J63087 	フィルター　ＳＰ３ FILTER SP3	FOR D2H, D70, D70s, D50, D200, D80, D40, D40x
※J63108 	Ｄ９０用ＡＥ　ＣＣＤ用チャートボード AE/CCD USE CHART BOARD FOR D90	
J61213 	電池工具 Battery tool	
	アイピースキャップ EYEPIECE CAP	製品転用 RJ IS NOT AVAILABLE
	ボディキャップ BODY CAP	製品転用 RJ IS NOT AVAILABLE

※：新規設定工具・NEW TOOL

工具番号 Tool No.	名　称 Name of tool	備　考 Others
C-8008B 	セメダイン　８００８（黒） CEMEDAIN 8008(BLACK)	
EDB0011 	ネジロック（赤）１４０１Ｃ SCREW LOCK 1401C	
LEN317A 	グリース　ＬＥＮ３１７Ａ GREASE LEN317A	
OS-30MEL 	ドライサーフ　ＯＳ－３０ＭＥＬ DRY SURF OS-30MEL (OIL BARRIER)	ＯＳ－３０ＭＦ使用可 OS-30MF IS AVAILABLE
	アロンアルファ QUICK DRYING GLUE	汎用品 RJ IS NOT AVAILABLE
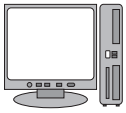	パーソナルコンピュータ PERSONAL COMPUTER	汎用品 RJ IS NOT AVAILABLE
	安定化電源（10Ｖ　５Ａ） POWER SUPPLY(10V 5A)	汎用品 RJ IS NOT AVAILABLE
	フラッシュメーター FLASH METER	汎用品 RJ IS NOT AVAILABLE
	ヘクスキー（φ１．５ｍｍ） HEX. KEY WRENCH（φ1.5mm)	汎用品 RJ IS NOT AVAILABLE
	ＡＦ２８／２．８Ｄ LENS AF28/2.8D	製品転用 RJ IS NOT AVAILABLE
	AF70-300/4-5.6D or AF-SVR70-300/4.5-5.6 LENS AF70-300/4-5.6D or LENS AF-SVR70-300/4.5-5.6 LENS AF70-200/4-5.6D or LENS AF-SVR70-200/4-5.6	製品転用 RJ IS NOT AVAILABLE
	ＵＳＢケーブルＵＣ－Ｅ４ USB CABLE UC-E4	製品転用 RJ IS NOT AVAILABLE
	ＡＣアダプター　ＥＨ－５ AC ADAPTER EH-5	製品転用 RJ IS NOT AVAILABLE